THIS DOCUMENT IS TRUE AND CORRECT AT TIME OF PUBLICATION. CONTINUED PRODUCT IMPROVEMENTS MAKE SPECIFICATIONS AND MEASUREMENTS SUBJECT TO CHANGE WITHOUT NOTICE.

NOTES:

1. WHEN INSTALLING THIS UNIT, LOCAL , STATE, OR FEDERAL CODES SHOULD BE ADHERED TO FOR INSTALLATION DIMENSIONS (LOCATIONS), WASTE AND SUPPLY REQUIREMENTS OTHER THAN SHOWN.
2. TO COMPLY WITH ANSI Z358.1-2014 FOR EMERGENCY EYEWASH OR EYE/FACE WASH: EYEWASH OR EYE/FACE WASH SHALL BE POSITIONED SUCH THAT FLUSHING FLUID PATTERN IS NOT LESS THAN 33" (838mm), NO GREATER THAN 53" (1346mm) FROM SURFACE ON WHICH USER STANDS,AND 6.0" (153mm) MINIMUM FROM WALL OR NEAREST OBSTRUCTION.

[3] SHOWER MUST BE POSITIONED IN-LINE WITH EYE/FACEWASH HEAD TO ALLOW FOR SIMULTANEOUS USE BY THE SAME USER PER ANSI Z358.1.

[4] MOUNTING HARDWARE NOT SUPPLIED.

5. DIMENSIONS MAY VARY BY ±1/2" (13 mm).

OPTIONAL SHOWER HEAD INSTALLATION

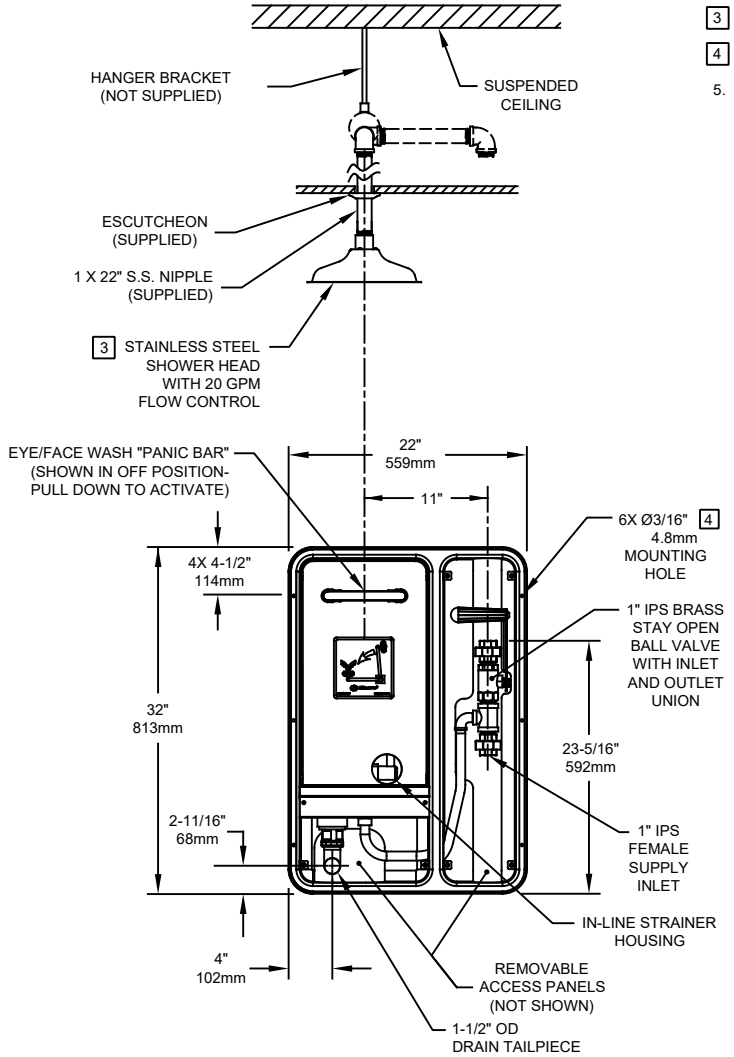

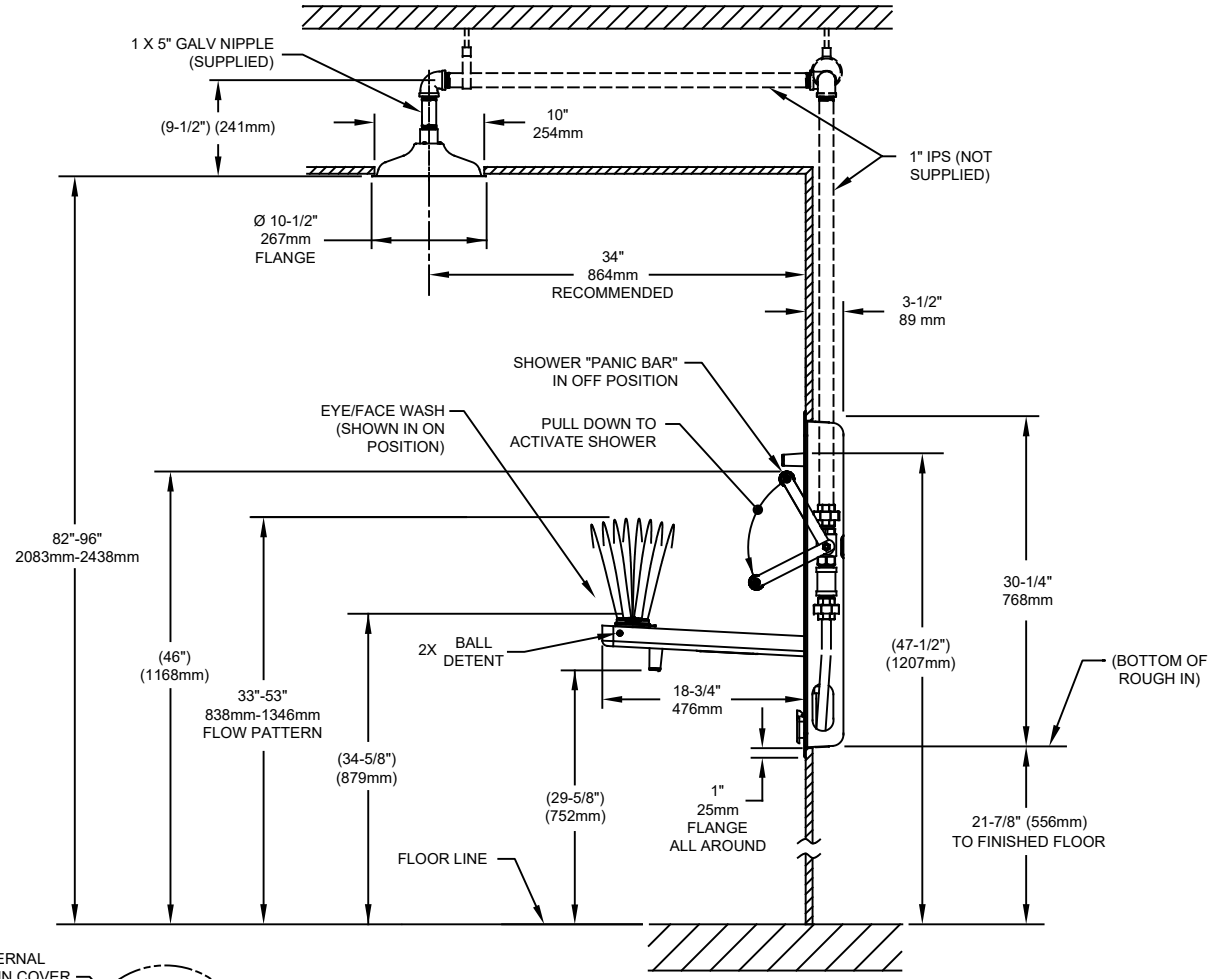

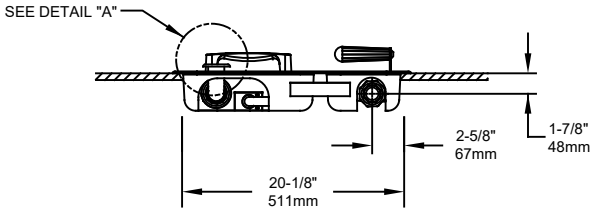

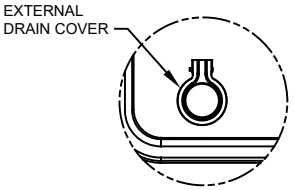

DETAIL "A" ROTATED FOR CLARITY

1455 KLEPPE LANE
SPARKS, NEVADA 89431
(775) 359-4712 FAX (775) 359-7424
E-MAIL: HAWS@HAWSCO.COM
WEBSITE: WWW.HAWSCO.COM

ECN NO. 4290	REVISED PER ECN: 5752	BY: FV	MODEL(S) 8356WCDD	PART NUMBER 0002080154.D
DRAWN: I. ROBERTS	DATE: 7/12/10	CHK'D.: JL		REVISION 8
APPROVED: FV	DATE: 10/19/21		SCALE: NA / DRAWING TYPE: INSTALLATION / SIZE: A	SHEET 1 OF 1

©2021 Haws Corporation - All Rights Reserved. HAWS® and other trademarks used in these materials are the exclusive property of Haws Corporation.