Product Data Sheet
March 2018
00813-0100-4001, Rev TC

Rosemount™ 3051 Pressure Transmitter

With the Rosemount 3051 Pressure Transmitter, you'll gain more control over your plant. You'll be able to reduce product variation and complexity, as well as your total cost of ownership by leveraging one device across a number of pressure, level, and flow applications. You'll have access to information you can use to diagnose, correct, and even prevent issues. And with unparalleled reliability and experience, the Rosemount 3051 is the industry standard that will help increase efficiency and safety so your operations can remain globally competitive.

Setting the standard for pressure measurement

Proven best-in-class performance, reliability and safety

- More than seven million installed
- Reference accuracy 0.04 percent of span
- Installed total performance of 0.14 percent of span
- 10-year stability of 0.2 percent of URL
- SIL2/3 certified (IEC 61508)

Maximize installation and application flexibility with the coplanar platform

- Improve reliability and performance with integrated DP Flowmeters, DP Level solutions and integral manifolds
- Easy installation with all solutions fully assembled, leak-tested and calibrated
- Meet your application needs with an unsurpassed offering

Advanced functionality

Power advisory diagnostics

- Detect on-scale failures caused by electrical loop issues before they impact your process operation
- This capability is safety certified for your most critical applications

Local operator interface (LOI)

- Straightforward menus and built-in configuration buttons allow you commission the device in less than a minute
- Configure in hazardous-area locations without removing the transmitter cover using external buttons

Contents

Industry leading capabilities extended to IEC 62591 (*Wireless*HART®)

- Cost effectively implement wireless on the industry's most proven platform
- Optimize safety with the industry's only intrinsically safe power module
- Eliminate wiring design and construction complexities to lower costs by 40 to 60 percent
- Quickly deploy new pressure, level, and flow measurements in 70 percent less time

Innovative, integrated DP Flowmeters

- Fully assembled, configured, and leak tested for out-of-the-box installation
- Reduce straight pipe requirements, lower permanent pressure loss, and achieve accurate measurement in small line sizes
- Up to 1.65 percent volumetric flow accuracy at 8:1 turndown

Proven, reliable, and innovative DP Level Technologies

- Connect to virtually any process with a comprehensive offering of process connections, fill fluids, direct mount, or capillary connections and materials
- Quantify and optimize total system performance with QZ option
- Operate at higher temperature and in vacuum applications
- Optimize level measurement with cost efficient Rosemount Tuned-System™ Assemblies

Instrument manifolds – quality, convenient, and easy

- Designed and engineered for optimal performance with Rosemount transmitters
- Save installation time and money with factory assembly
- Offers a variety of styles, materials, and configurations

Rosemount 3051C Coplanar Pressure Transmitter

Rosemount 3051C Coplanar™ Pressure Transmitters are the industry standard for differential, gage, and absolute pressure measurement. The coplanar platform enables seamless integration with manifolds, flow and level solutions. Capabilities include:

- Power advisory can proactively detect degraded electrical loop integrity issues (option code DA0)
- LOI with straightforward menus and built-in configuration buttons (option code M4)
- Safety Certification (option code QT)

Additional information:

Specifications: page 44
Certifications: page 56
Dimensional drawings: page 67

See Specifications and options for more details on each configuration. Specification and selection of product materials, options, or components must be made by the purchaser of the equipment. See page 53 for more information on material selection.

Table 1. Rosemount 3051C Coplanar Pressure Transmitters Ordering Information

The starred offerings (★) represent the most common options and should be selected for best delivery. The non-starred offerings are subject to additional delivery lead time.

Model[1]	Transmitter type			
3051C	Coplanar pressure transmitter			
Measurement type				
D	Differential			★
G	Gage			★
A[2]	Absolute			
Pressure range				
	Differential (Rosemount 3051CD)	**Gage (Rosemount 3051CG)**	**Absolute (Rosemount 3051CA)**	
1	–25 to 25 inH_2O (–62,16 to 62,16 mbar)	–25 to 25 inH_2O (–62,16 to 62,16 mbar)	0 to 30 psia (0 to 2,06 bar)	★
2	–250 to 250 inH_2O (–621,60 to 621,60 mbar)	–250 to 250 inH_2O (–621,60 to 621,60 mbar)	0 to 150 psia (0 to 10,34 bar)	★
3	–1000 to 1000 inH_2O (–2,48 to 2,48 bar)	–393 to 1000 inH_2O (–0,97 to 2,48 bar)	0 to 800 psia (0 to 55,15 bar)	★
4	–300 to 300 psi (–20,68 to 20,68 bar)	–14.2 to 300 psi (–0,97 to 20,68 bar)	0 to 4000 psia (0 to 275,79 bar)	★
5	–2000 to 2000 psi (–137,89 to 137,89 bar)	–14.2 to 2000 psi (–0,97 to 137,89 bar)	N/A	★
0[3]	–3 to 3 inH_2O (-7,46 to 7,46 mbar)	N/A	N/A	
Transmitter output				
A[4]	4–20 mA with digital signal based on HART® Protocol			★
F	FOUNDATION™ Fieldbus Protocol			★
W[5]	PROFIBUS® PA Protocol			★
X[6]	Wireless (requires wireless options and engineered polymer housing)			★
M[7]	Low-power, 1–5 Vdc with digital signal based on HART Protocol			

Table 1. Rosemount 3051C Coplanar Pressure Transmitters Ordering Information

The starred offerings (★) represent the most common options and should be selected for best delivery. The non-starred offerings are subject to additional delivery lead time.

Materials of construction				
	Process flange type	**Flange material**	**Drain/vent**	
2	Coplanar	Stainless steel (SST)	SST	★
3[8]	Coplanar	Cast C-276	Alloy C-276	★
4	Coplanar	Alloy 400	Alloy 400/K-500	★
5	Coplanar	Plated carbon steel (CS)	SST	★
7[8]	Coplanar	SST	Alloy C-276	★
8[8]	Coplanar	Plated CS	Alloy C-276	★
0	Alternate process connection			★
Isolating diaphragm				
2[8]	316L SST			★
3[8]	Alloy C-276			★
4[9]	Alloy 400			
5[9]	Tantalum (available on Rosemount 3051CD and CG, ranges 2–5 only; not available on Rosemount 3051CA)			
6[9]	Gold-plated alloy 400 (use in combination with O-ring option code B)			
7[9]	Gold-plated 316 SST			
O-ring				
A	Glass-filled PTFE			★
B	Graphite-filled PTFE			★
Sensor fill fluid				
1	Silicone			★
2[9]	Inert (differential and gage only)			★
Housing material			**Conduit entry size**	
A	Aluminum		1/2–14 NPT	★
B	Aluminum		M20 x 1.5	★
E	Aluminum, ultra low copper		1/2–14 NPT	★
F	Aluminum, ultra low copper		M20 x 1.5	★
J	SST		1/2–14 NPT	★
K	SST		M20 x 1.5	★
P[10]	Engineered polymer		No conduit entries	★
D[11]	Aluminum		G1/2	
M[11]	SST		G1/2	

Wireless options (requires wireless output code X and engineered polymer housing code P)

Wireless transmit rate, operating frequency, and protocol		
WA3	User Configurable Transmit Rate, 2.4GHz *Wireless*HART Protocol	★
Antenna and SmartPower™		
WP5	Internal antenna, compatible with Green Power Module (I.S. Power Module sold separately)	★

Table 1. Rosemount 3051C Coplanar Pressure Transmitters Ordering Information

The starred offerings (★) represent the most common options and should be selected for best delivery. The non-starred offerings are subject to additional delivery lead time.

Options (include with selected model number)

Extended product warranty		
WR3	3-year limited warranty	★
WR5	5-year limited warranty	★
Plantweb™ control functionality[12]		
A01	FOUNDATION Fieldbus control function block suite	★
Plantweb diagnostic functionality		
DA0[13]	Power Advisory HART Diagnostic	★
D01[12]	FOUNDATION Fieldbus Diagnostics Suite	★
Alternate flange[14]		
H2	Traditional flange, 316 SST, SST drain/vent	★
H3[8]	Traditional flange, alloy *C*, alloy *C-276* drain/vent	★
H4	Traditional flange, cast alloy 400, alloy 400/K-500 drain/vent	★
H7[8]	Traditional flange, 316 SST, alloy *C-276* drain/vent	★
HJ	DIN-compliant traditional flange,SST,7/16-in. adapter/manifold bolting	★
FA	Level flange, SST, 2-in., ANSI class 150, vertical mount 316 SST drain/vent	★
FB	Level flange, SST, 2-in., ANSI Class 300, vertical mount 316 SST drain/vent	★
FC	Level flange, SST, 3-in., ANSI Class 150, vertical mount 316 SST drain/vent	★
FD	Level flange, SST, 3-in., ANSI Class 300, vertical mount 316 SST drain/vent	★
FP	DIN level flange, SST, DN 50, PN 40, vertical mount 316 SST drain/vent	★
FQ	DIN level flange, SST, DN 80, PN 40, vertical mount 316 SST drain/vent	★
HK[15]	DIN compliant traditional flange, SST, 10 mm adapter/manifold bolting 316 SST	
HL	DIN compliant traditional flange, SST, 12 mm adapter/manifold bolting 316 SST	
Manifold assembly[16]		
S5	Assemble to Rosemount 305 Integral Manifold	★
S6	Assemble to Rosemount 304 Manifold or Connection System	★
Integral mount primary element[15][16]		
S3	Assemble to Rosemount 405 Compact Orifice Plate	★
S4[17]	Assemble to Rosemount Annubar™ or Rosemount 1195 Integral Orifice	★
Seal assemblies[16]		
S1[18]	Assemble to one Rosemount 1199 seal	★
S2[19]	Assemble to two Rosemount 1199 seals	★
Mounting bracket[20]		
B4	Coplanar flange bracket, all SST, 2-in. pipe and panel	★
B1	Traditional flange bracket, CS, 2-in. pipe	★
B2	Traditional flange bracket, CS, panel	★
B3	Traditional flange flat bracket, CS, 2-in. pipe	★
B7	Traditional flange bracket, B1 with SST bolts	★
B8	Traditional flange bracket, B2 with SST bolts	★
B9	Traditional flange bracket, B3 with SST bolts	★

Table 1. Rosemount 3051C Coplanar Pressure Transmitters Ordering Information

The starred offerings (★) represent the most common options and should be selected for best delivery. The non-starred offerings are subject to additional delivery lead time.

BA	Traditional flange bracket, B1, all SST	★
BC	Traditional flange bracket, B3, all SST	★
Product certifications		
E8	ATEX Flameproof and Dust Certification	★
I1[21]	ATEX Intrinsic Safety and Dust	★
IA	ATEX FISCO Intrinsic Safety; for FOUNDATION Fieldbus or PROFIBUS PA Protocol only	★
N1	ATEX Type n Certification and Dust	★
K8	ATEX Flameproof, Intrinsic Safety, Type n, Dust (combination of E8, I1, and N1)	★
E4[22]	TIIS Flame-proof	★
E5	FM Explosion-proof, Dust Ignition-Proof	★
I5[23]	FM Intrinsically Safe, Nonincendive	★
IE	FM FISCO Intrinsically Safe; for FOUNDATION Fieldbus or PROFIBUS PA Protocol only	★
K5	FM Explosion-proof, Dust Ignition-Proof, Intrinsically Safe, and Division 2	★
C6	CSA Explosion-proof, Dust Ignition-proof, Intrinsically Safe, and Division 2	★
I6[10]	CSA Intrinsic Safety	★
K6	CSA and ATEX Explosion-proof, Intrinsically Safe, and Division 2 (combination of C6, E8, and I1)	★
E7	IECEx Flameproof, Dust Ignition-proof	★
I7	IECEx Intrinsic Safety	★
N7	IECEx Type n Certification	★
K7	IECEx Flame-proof, Dust Ignition-proof, Intrinsic Safety, and Type n (combination of I7, N7, and E7)	★
E2	INMETRO Flameproof	★
I2	INMETRO Intrinsic Safety	★
IB	INMETRO FISCO intrinsically safe; for FOUNDATION Fieldbus or PROFIBUS PA Protocols only	★
K2	INMETRO Flameproof, Intrinsic Safety	★
E3	China Flameproof	★
I3	China Intrinsic Safety	★
N3	China Type n	★
EM	Technical Regulations Customs Union (EAC) Flameproof	★
IM	Technical Regulations Customs Union (EAC) Intrinsic Safety	★
KM	Technical Regulations Customs Union (EAC) Flameproof and Intrinsic Safety	★
KB	FM and CSA Explosion-proof, Dust Ignition Proof, Intrinsically Safe, and Division 2 (combination of K5 and C6)	★
KD	FM, CSA, and ATEX Explosion-proof, Intrinsically Safe (combination of K5, C6, I1, and E8)	★
Drinking water approval[24]		
DW	NSF drinking water approval	★
Shipboard approvals[9]		
SBS	American Bureau of Shipping	★
SBV[25]	Bureau Veritas (BV)	★
SDN	Det Norske Veritas	★
SLL[25]	Lloyds Register (LR)	★
Custody transfer[13]		
C5	Measurement Canada Accuracy Approval (limited availability depending on transmitter type and range; contact an Emerson™ representative)	★

Table 1. Rosemount 3051C Coplanar Pressure Transmitters Ordering Information

The starred offerings (★) represent the most common options and should be selected for best delivery. The non-starred offerings are subject to additional delivery lead time.

Bolting material		
L4	Austenitic 316 SST bolts	★
L5	ASTM A 193, grade B7M bolts	★
L6	Alloy K-500 bolts	★
Display and interface options		
M4[26]	LCD display with LOI	★
M5	LCD display	★
Calibration certificate		
Q4	Calibration Certificate	★
QG[27]	Calibration Certificate and GOST Verification Certificate	★
QP	Calibration certification and tamper evident seal	★
Material traceability certification		
Q8	Material Traceability Certification per EN 10204 3.1	★
Quality certification for safety[13]		
QS	Prior-use certificate of FMEDA data	★
QT	Safety certified to IEC 61508 with certificate of FMEDA	★
Configuration buttons		
D4[13]	Analog zero and span	★
DZ[28]	Digital zero trim	★
Transient protection[9][29]		
T1	Transient protection terminal block	★
Software configuration[28]		
C1	Custom Software Configuration (For wired, see the Rosemount 3051 Configuration Data Sheet. For wireless, see the Rosemount 3051 Wireless Configuration Data Sheet.)	★
Low power output		
C2	0.8–3.2 Vdc output with digital signal based on HART Protocol (available with output code M only)	★
Gage pressure calibration		
C3	Gage calibration (Rosemount 3051ca4 only)	★
Alarm levels[13]		
C4	Analog output levels compliant with NAMUR recommendation NE 43, alarm high	★
CN	Analog output levels compliant with NAMUR recommendation NE 43, alarm low	★
CR	Custom alarm and saturation signal levels, high alarm (requires C1 and Rosemount 3051 Configuration Data Sheet)	★
CS	Custom alarm and saturation signal levels, low alarm (requires C1 and Rosemount 3051 Configuration Data Sheet)	★
CT	Rosemount standard low alarm	★
Pressure testing		
P1	Hydrostatic testing with certificate	

Table 1. Rosemount 3051C Coplanar Pressure Transmitters Ordering Information

The starred offerings (★) represent the most common options and should be selected for best delivery. The non-starred offerings are subject to additional delivery lead time.

Cleaning process area		
P2	Cleaning for special service	
P3	Cleaning for <1 PPM chlorine/fluorine	
Flange adapters[30]		
DF	1/2–14 NPT flange adapter(s)	★
Vent/drain valves		
D7	Coplanar flange without drain/vent ports	
Conduit plug[9][31]		
DO	316 SST conduit plug	★
RC1/4 RC1/2 process connection[32]		
D9	RC 1/4 flange with RC 1/2 flange adapter - SST	
Max static line pressure		
P9	4500 psig (310,26 bar) static pressure limit (Rosemount 3051CD ranges 2–5 only)	★
Ground screw[9][33]		
V5	External ground screw assembly	★
Surface finish		
Q16	Surface finish certification for sanitary remote seals	★
Toolkit total system performance reports		
QZ	Remote seal system performance calculation report	★
Conduit electrical connector[9]		
GE	M12, 4-pin, male connector (eurofast®)	★
GM	A size Mini, 4-pin, male connector (minifast®)	★
NACE® certificate[34]		
Q15	Certificate of Compliance to NACE MR0175/ISO 15156 for wetted materials	★
Q25	Certificate of Compliance to NACE MR0103 for wetted materials	★
Cold temperature[35]		
BR5	–58 °F (–50 °C) cold temperature	★
BR6	–76 °F (–60 °C) cold temperature	★
HART Revision configuration (requires HART output code A)[4]		
HR5	Configured for HART Revision 5	★
HR7	Configured for HART Revision 7	★
Typical model number: 3051CD 2 A 2 2 A 1 A B4		

1. Select configuration buttons (option code D4 or DZ) or LOI (option code M4) if local configuration buttons are required.
2. If ordered with Wireless output code X, only range 1–4, 316L SST diaphragm material (code 2), silicone fill fluid (code 1) and wireless housing (code P) are available.
3. Rosemount 3051CD0 is only available with output code A and X. For output code A, only process flange code 0 (alternate flange H2, H7, HJ, or HK), isolating diaphragm code 2, O ring code A and bolting option L4 are available. For output code X, only process flange code 0 (alternate flange H2), isolating diaphragm code 2, O ring code A and bolting option L4 are available.

4. Option HR5 configures the HART output to HART Revision 5. Option HR7 configures the HART output to HART Revision 7. The device can be field configured to HART Revision 5 or 7 if desired. HART Revision 5 is the default HART output.
5. For local addressing and configuration, M4 LOI is required.
6. Available approvals are FM Intrinsically Safe, (option code I5), CSA Intrinsically Safe (option code I6), ATEX Intrinsic Safety (option code I1), IECEx Intrinsic Safety (option code I7) and EAC Intrinsic Safety (option code IM).
7. Only available with C6, E2, E5, I5, K5, KB, and E8 product certifications. Not available with GE, GM, SBS, DA0, M4, D4, DZ, QT, HR5, HR7, CR, CS, and CT.
8. Materials of Construction comply with recommendations per NACE MR0175/ISO 15156 for sour oil field production environments. Environmental limits apply to certain materials. Consult latest standard for details. Selected materials also conform to NACE MR0103 for sour refining environments.
9. Not available with wireless output (code X).
10. Only available with wireless output (code X).
11. Not available with Product certifications options E8, K8, E5, K5, C6, K6, E7, K7, E2, K2, E3, KB, and KD.
12. Only valid with FOUNDATION Fieldbus output (code F).
13. Only available with HART 4–20 mA output (code A).
14. Requires 0 code in materials of construction for alternate process connection.
15. Not valid with option code P9 for 4500 psi static pressure.
16. “Assemble-to” items are specified separately and require a completed model number.
17. Process flange limited to coplanar (option codes 2, 3, 5, 7, 8) or traditional (option codes H2, H3, H7).
18. Not valid with option code D9 for RC$^{1}/_{2}$ adapters.
19. Not valid for option codes DF and D9 for adapters.
20. Panel mounting bolts are not supplied.
21. Dust approval not applicable to output code X. See “Certificate: AG-0226; AG-0454; AG-0477” on page 62 for wireless approvals.
22. Only available with output codes A - 4–20mA HART, F - FOUNDATION Fieldbus, and W - PROFIBUS PA. Also only available with G$^{1}/_{2}$ housing thread types.
23. Nonincendive certification not provided with Wireless output (code X).
24. Not available with Alloy C-276 isolator (code 3), tantalum isolator (code 5), all cast C-276 flanges, all plated carbon steel (CS) flanges, all DIN flanges, all Level flanges, assemble-to manifolds (codes S5 and S6), assemble-to seals (codes S1 and S2), assemble-to primary elements (codes S3 and S4), surface finish certification (code Q16), and remote seal system report (code QZ).
25. Only available with product certifications E7, E8, I1, I7, IA, K7, K8, KD, N1, and N7
26. Not available with FOUNDATION Fieldbus (code F), wireless (code X), or low power (code M).
27. Contact an Emerson representative for availability.
28. Only available with HART 4–20 mA output (code A) and wireless output (code X)
29. The T1 option is not needed with FISCO Product Certifications; transient protection is included in the FISCO product certification codes IA, IB, and IE.
30. Not valid with alternate process connection options S3, S4, S5, and S6.
31. Transmitter is shipped with a 316 SST conduit plug (uninstalled) in place of standard CS conduit plug.
32. Not available with alternate process connection; DIN flanges and level flanges.
33. The V5 option is not needed with the T1 option; external ground screw assembly is included with the T1 option.
34. NACE compliant wetted materials are identified by Footnote 8.
35. Only available on pressure ranges 1–5, with silicone sensor fill fluid and SST or C-276 isolating diaphragms.

Rosemount 3051T In-Line Pressure Transmitter

Rosemount 3051T In-Line Pressure Transmitters are the industry standard for gage and absolute pressure measurement. The in-line, compact design allows the transmitter to be connected directly to a process for quick, easy and cost effective installation. Capabilities include:

- Power advisory can proactively detect degraded electrical loop integrity issues (option code DA0)
- LOI with straightforward menus and built-in configuration buttons (option code M4)
- Safety Certification (option code QT)

Additional information:

Specifications: page 44
Certifications: page 56
Dimensional drawings: page 67

See "Specifications" on page 44 and options for more details on each configuration. Specification and selection of product materials, options, or components must be made by the purchaser of the equipment. See page 53 for more information on material selection.

Table 2. Rosemount 3051T In-Line Pressure Transmitter Ordering Information

The starred offerings (★) represent the most common options and should be selected for best delivery. The non-starred offerings are subject to additional delivery lead time.

Model[1]	Transmitter type		
3051T	In-line pressure transmitter		
Pressure type			
G	Gage		★
A[2]	Absolute		★
Pressure range			
	Gage (Rosemount 3051TG)[3]	**Absolute (Rosemount 3051TA)**	
1	–14.7 to 30 psi (–1,01 to 2,06 bar)	0 to 30 psia (0 to 2,06 bar)	★
2	–14.7 to 150 psi (–1,01 to 10,34 bar)	0 to 150 psia (0 to 10,34 bar)	★
3	–14.7 to 800 psi (–1,01 to 55,15 bar)	0 to 800 psia (0 to 55,15 bar)	★
4	–14.7 to 4000 psi (–1,01 to 275,79 bar)	0 to 4000 psia (0 to 275,79 bar)	★
5	–14.7 to 10000 psi (–1,01 to 689,47 bar)	0 to 10000 psia (0 to 689,47 bar)	★
6[4]	–14.7 to 20000 psi (–1,01 to 1378,95 bar)	0 to 20000 psia (0 to 1378,95 bar)	
Transmitter output			
A[5]	4–20 mA with digital signal based on HART Protocol		★
F	FOUNDATION Fieldbus Protocol		★
W[6]	PROFIBUS PA Protocol		★
X[7]	Wireless (requires wireless options and engineered polymer housing)		★
M[8]	Low-power 1–5 Vdc with digital signal based on HART Protocol		

Table 2. Rosemount 3051T In-Line Pressure Transmitter Ordering Information

The starred offerings (★) represent the most common options and should be selected for best delivery. The non-starred offerings are subject to additional delivery lead time.

Process connection style			
2B	1/2–14 NPT female (range 1–5 only)		★
2C[9]	G1/2 A DIN 16288 male (range 1–4 only)		★
2F[10]	Coned and threaded, compatible with autoclave type F-250-C (range 5–6 only)		
61[11]	Non-threaded Instrument flange (range 1–4 only)		
Isolating diaphragm[12]		**Process connection wetted parts material**	
2	316L SST	316L SST	★
3	Alloy C-276	Alloy C-276	★
7	Gold-plated 316 SST	316L SST	
Sensor fill fluid			
1	Silicone		★
2[11]	Inert		★
Housing material		**Conduit entry size**	
A	Aluminum	1/2–14 NPT	★
B	Aluminum	M20 x 1.5	★
E	Aluminum, ultra low copper	1/2–14 NPT	
F	Aluminum, ultra low copper	M20 x 1.5	
J	SST	1/2–14 NPT	★
K	SST	M20 x 1.5	★
P[13]	Engineered polymer	No conduit entries	★
D[14]	Aluminum	G1/2	
M[14]	SST	G1/2	

Wireless options (requires wireless output code X and engineered polymer housing code P)

Wireless transmit rate, operating frequency, and protocol		
WA3	User configurable transmit rate, 2.4GHz *Wireless*HART Protocol	★
Antenna and SmartPower		
WP5	Internal antenna, compatible with Green Power Module (I.S. Power Module sold separately)	★

Options (include with selected model number)

Extended product warranty		
WR3	3-year limited warranty	★
WR5	5-year limited warranty	★

Table 2. Rosemount 3051T In-Line Pressure Transmitter Ordering Information

The starred offerings (★) represent the most common options and should be selected for best delivery. The non-starred offerings are subject to additional delivery lead time.

Plantweb control functionality[15]		
A01	FOUNDATION Fieldbus control function block suite	★
Plantweb diagnostic functionality		
DA0[24]	Power Advisory HART diagnostic	★
D01[15]	FOUNDATION Fieldbus diagnostics suite	★
Integral assembly[16]		
S5	Assemble to Rosemount 306 Integral Manifold	★
Diaphragm seal assemblies[16]		
S1	Assemble to one Rosemount 1199 seal	★
Mounting bracket[17]		
B4	Bracket for 2-in. pipe or panel mounting, all SST	★
Product certifications		
E8	ATEX Flameproof and Dust Certification	★
I1[18]	ATEX Intrinsic Safety and Dust	★
IA	ATEX Intrinsic Safety for FISCO; for FOUNDATION Fieldbus or PROFIBUS PA Protocols only	★
N1	ATEX Type n Certification and Dust	★
K8	ATEX Flame-proof, Intrinsic Safety, Type n, Dust (combination of E8, I1, and N1)	★
E4[19]	TIIS Flameproof	★
E5	FM Explosion-proof, Dust Ignition-proof	★
I5[20]	FM Intrinsically Safe, Nonincendive	★
IE	FM FISCO Intrinsically Safe; for FOUNDATION Fieldbus or PROFIBUS PA Protocols only	★
K5	FM Explosion-proof, Dust Ignition-proof, Intrinsically Safe, and Division 2	★
C6	CSA Explosion-proof, Dust Ignition-proof, Intrinsically Safe, and Division 2	★
I6[13]	CSA Intrinsic Safety	★
K6	CSA and ATEX Explosion-proof, Intrinsically Safe, and Division 2 (combination of C6, E8, and I1)	★
E7	IECEx Flameproof, Dust Ignition-proof	★
I7	IECEx Intrinsic Safety	★
N7	IECEx Type n Certification	★
K7	IECEx Flameproof, Dust Ignition-proof, Intrinsic Safety, and Type n (combination of I7, N7, and E7)	★
E2	INMETRO Flameproof	★
I2	INMETRO Intrinsic Safety	★
IB	INMETRO FISCO intrinsically safe; for FOUNDATION Fieldbus or PROFIBUS PA Protocols only	★
K2	INMETRO Flameproof, Intrinsic Safety	★
E3	China Flameproof	★

Table 2. Rosemount 3051T In-Line Pressure Transmitter Ordering Information

The starred offerings (★) represent the most common options and should be selected for best delivery. The non-starred offerings are subject to additional delivery lead time.

I3	China Intrinsic Safety	★
N3	China Type n	★
EM	Technical Regulations Customs Union (EAC) Flameproof	★
IM	Technical Regulations Customs Union (EAC) Intrinsic Safety	★
KM	Technical Regulations Customs Union (EAC) Flameproof and Intrinsic Safety	★
KB	FM and CSA Explosion-proof, Dust Ignition-proof, Intrinsically Safe, and Division 2 (combination of K5 and C6)	★
KD	FM, CSA, and ATEX Explosion-proof, Intrinsically Safe (combination of K5, C6, I1, and E8)	★
Drinking water approval[21]		
DW	NSF drinking water approval	★
Shipboard approvals[11]		
SBS	American Bureau of Shipping	★
SBV[22]	Bureau Veritas (BV)	★
SDN	Det Norske Veritas	★
SLL[22]	Lloyds Register (LR)	★
Custody transfer		
C5	Measurement Canada Accuracy Approval (Limited availability depending on transmitter type and range. Contact an Emerson representative.)	★
Calibration certification		
Q4	Calibration Certificate	★
QG[23]	Calibration Certificate and GOST Verification Certificate	★
QP	Calibration Certification and tamper evident seal	★
Material traceability certification		
Q8	Material Traceability Certification per EN 10204 3.1	★
Quality certification for safety[24]		
QS	Prior-use certificate of FMEDA Data	★
QT	Safety certified to IEC 61508 with certificate of FMEDA	★
Configuration buttons		
D4[24]	Analog zero and span	★
DZ[25]	Digital zero trim	★
Display and interface options		
M4[26]	LCD display with LOI	★
M5	LCD display	★
Wireless SST sensor module[13]		
WSM	Wireless SST sensor module	★

Table 2. Rosemount 3051T In-Line Pressure Transmitter Ordering Information

The starred offerings (★) represent the most common options and should be selected for best delivery. The non-starred offerings are subject to additional delivery lead time.

Conduit plug[11][27]		
DO	316 SST conduit plug	★
Transient terminal block[11][28]		
T1	Transient protection terminal block	★
Software configuration[25]		
C1	Custom Software Configuration (For wired, see the Rosemount 3051 Configuration Data Sheet. For wireless, see the Rosemount 3051 Wireless Configuration Data Sheet.)	★
Low power output		
C2	0.8–3.2 Vdc output with digital signal based on HART Protocol (available with output code M only)	
Alarm levels[24]		
C4	Analog output levels compliant with NAMUR recommendation NE 43, alarm high	★
CN	Analog output levels compliant with NAMUR recommendation NE 43, low alarm	★
CR	Custom alarm and saturation signal levels, high alarm (requires C1 and Rosemount 3051 Configuration Data Sheet)	★
CS	Custom alarm and saturation signal levels, low alarm (requires C1 and Rosemount 3051 Configuration Data Sheet)	★
CT	Rosemount standard low alarm	★
Pressure testing		
P1	Hydrostatic testing with certificate	
Cleaning process area[29]		
P2	Cleaning for special service	
P3	Cleaning for <1 PPM chlorine/fluorine	
Ground screw[11][30]		
V5	External ground screw assembly	★
Surface finish		
Q16	Surface finish certification for sanitary remote seals	★
Toolkit total system performance reports		
QZ	Remote seal system performance calculation report	★
Conduit electrical connector[11]		
GE	M12, 4-pin, male connector (eurofast)	★
GM	A size mini, 4-pin, male connector (minifast)	★
NACE certificate[31]		
Q15	Certificate of Compliance to NACE MR0175/ISO15156 for wetted materials	★
Q25	Certificate of Compliance to NACE MR0103 for wetted materials	★

Table 2. Rosemount 3051T In-Line Pressure Transmitter Ordering Information

The starred offerings (★) represent the most common options and should be selected for best delivery. The non-starred offerings are subject to additional delivery lead time.

Cold temperature		
BR5	–50 °F (–58 °C) cold temperature	★
BR6	–76 °F (–60 °C) cold temperature	★
HART Revision configuration (requires HART output code A)[5]		
HR5	Configured for HART Revision 5	★
HR7	Configured for HART Revision 7	★
Typical model number: 3051T G 5 F 2A 2 1 A B4		

1. Select configuration buttons (option code D4 or DZ) or LOI (option code M4) if local configuration buttons are required.
2. Wireless output (code X) only available in absolute measurement type (code A) in range 1–5 with 1/2–14 NPT process connection (code 2B), and polymer housing (code P). Wireless output and range 6 is only available with coned and threaded process connection (code 2F) and polymer housing.
3. Rosemount 3051TG lower range limit varies with atmospheric pressure.
4. Not available with PROFIBUS PA or low power 1–5 Vdc transmitter output (option code W or M), inert sensor fill fluid (option code 2), NSW drinking water approval (option code DW), or assemble to manifolds (option code S5).
5. Option HR5 configures the HART output to HART Revision 5. Option HR7 configures the HART output to HART Revision 7. The device can be field configured to HART Revision 5 or 7 if desired. HART Revision 5 is the default HART output.
6. For local addressing and configuration, M4 LOI is required.
7. Requires wireless options and engineered polymer housing. Available approvals are FM Intrinsically Safe, (option code I5), CSA Intrinsically Safe (option code I6), ATEX Intrinsic Safety (option code I1), IECEx Intrinsic Safety (option code I7), and EAC Intrinsic Safety (option code IM).
8. Only available with C6, E2, E5, I5, K5, KB, and E8 product certifications. Not available with GE, GM, SBS, DA0, M4, D4, DZ, QT, HR5, HR7, CR, CS, and CT.
9. Wireless output (code X) only available in G1/2 A DIN 16288 male process connection (code 2C) with range 1–4, 316 SST isolating diaphragm (code 2), silicone fill fluid (code 1) and housing (code P).
10. Not available with wireless output for range 5.
11. Not available with wireless (output code X).
12. Materials of construction comply with recommendations per NACE MR0175/ISO 15156 for sour oil field production environments. Environmental limits apply to certain materials. Consult latest standard for details. Selected materials also conform to NACE MR0103 for sour refining environments.
13. Only available with wireless (output code X).
14. Not available with Product certifications options E8, K8, E5, K5, C6, K6, E7, K7, E2, K2, E3, KB, and KD.
15. Only valid with FOUNDATION Fieldbus output code F.
16. "Assemble-to" items are specified separately and require a completed model number.
17. Panel mounting bolts are not supplied.
18. Dust approval not applicable to output code X. See "Certificate: AG-0226; AG-0454; AG-0477" on page 62 for wireless approvals.
19. Only available with output codes A - 4–20mA HART, F - FOUNDATION Fieldbus, and W - PROFIBUS PA. Also only available with G1/2 housing thread types.
20. Nonincendive certification not provided with wireless output (code X).
21. Not available with Alloy C-276 isolator (option code 3), assemble-to manifolds (option code S5), assemble-to seals (option code S1), surface finish certification (option code Q16), and remote seal system report (option code QZ).
22. Only available with product certifications E7, E8, I1, I7, IA, K7, K8, KD, N1, and N7.
23. Contact an Emerson representative for availability.
24. Only available with HART 4–20 mA output (code A).
25. Only available with HART 4–20 mA output (code A) and wireless output (code X).
26. Not available with FOUNDATION Fieldbus (code F) and wireless output (code X) or low power (code M).
27. Transmitter is shipped with 316 SST conduit plug (uninstalled) in place of standard CS conduit plug.
28. The T1 option is not needed with FISCO Product Certifications; transient protection is included in the FISCO product certification codes IA, IB, and IE.
29. Not valid with alternate process connection S5.
30. The V5 option is not needed with T1 option; external ground screw assembly is included with the T1 option.
31. NACE compliant wetted materials are identified by Footnote 11.

Rosemount 3051CF Flowmeter selection guide

Rosemount 3051CF Flowmeters combine the proven Rosemount 3051 Pressure Transmitter and the latest primary element technologies. All flowmeters are fully assembled, calibrated, configured, and leak tested for out-of-the-box installation and are available with wired or wireless capabilities to meet all of your application needs.

Rosemount 3051CFA Annubar Flowmeter

Rosemount Annubar technology minimizes permanent pressure loss while delivering best in class accuracy.

- Lowest material costs for large line sizes
- Flo-tap enables installation without process shutdown
- Realize up to 96 percent less permanent pressure loss compared to traditional orifice plate installations

Rosemount 3051CFC Compact Conditioning Flowmeter

Rosemount Compact Conditioning technologies provide unprecedented performance with minimal straight-run requirements. Solutions include conditioning orifice plate or Rosemount Annubar primary elements.

- Conditioning Orifice requires only two pipe diameters upstream and downstream
- Eliminate swirl and regular profiles resulting in more stable and accurate flow measurement
- Savings up to 55 percent when compared to a traditional orifice plate installation can be realized

Rosemount 3051CFP Integral Orifice Flowmeter

Rosemount Integral Orifice Flowmeters deliver highly accurate small-bore flow measurement capability with minimal installation and maintenance requirements.

- Best performance for small line sizes 1/2- to 1 1/2-in. (15 to 40 mm)
- Precision honed pipe section and tight machining tolerances deliver higher installed performance
- Reduces uncertainty by up to five percent compared to traditional orifice plate installation

Rosemount 3051CFA Annubar Flowmeter

The Rosemount 3051CFA Annubar Flowmeter utilizes the T-shaped sensor design that delivers best in class accuracy and performance while meeting the needs of diverse process applications, whether it is high accuracy for precision control or high strength for severe flow applications. Main capabilities include:

- Up to 1.8 percent of flow rate accuracy
- Available in 2-to 96-in. (50 to 2400 mm) line
- Fully assembled and leak tested for out-of-the-box installation
- Power advisory can proactively detect degraded electrical loop integrity issues (option code DA0)
- LOI with straightforward menus and built-in configuration buttons (option code M4)

Additional information:
Specifications: page 44
Certifications: page 56
Dimensional drawings: page 67

See "Specifications" on page 44 and options for more details on each configuration. Specification and selection of product materials, options, or components must be made by the purchaser of the equipment. See page 53 for more information on material selection.

Table 3. Rosemount 3051CFA Annubar Flowmeter Ordering Information

The starred offerings (★) represent the most common options and should be selected for best delivery. The non-starred offerings are subject to additional delivery lead time.

Model[1]	Product description	
3051CFA	Rosemount Annubar Flowmeter	
Measurement type		
D	Differential Pressure	★
Fluid type		
L	Liquid	★
G	Gas	★
S	Steam	★
Line size		
020	2-in. (50 mm)	★
025	2 1/2-in. (63.5 mm)	★
030	3-in. (80 mm)	★
035	3 1/2-in. (89 mm)	★
040	4-in. (100 mm)	★
050	5-in. (125 mm)	★
060	6-in. (150 mm)	★
070	7-in. (175 mm)	★
080	8-in. (200 mm)	★
100	10-in. (250 mm)	★
120	12-in. (300 mm)	★
140	14-in. (350 mm)	
160	16-in. (400 mm)	
180	18-in. (450 mm)	
200	20-in. (500 mm)	

Table 3. Rosemount 3051CFA Annubar Flowmeter Ordering Information

The starred offerings (★) represent the most common options and should be selected for best delivery. The non-starred offerings are subject to additional delivery lead time.

240	24-in. (600 mm)	
300	30-in. (750 mm)	
360	36-in. (900 mm)	
420	42-in. (1066 mm)	
480	48-in. (1210 mm)	
600	60-in. (1520 mm)	
720	72-in. (1820 mm)	
780	78-in (1950 mm)	
840	84-in. (2100 mm)	
900	90-in. (2250 mm)	
960	96-in (2400 mm)	
Pipe I.D. range		
C	Range C from the Pipe I.D. range codes table	★
D	Range D from the Pipe I.D. range codes table	★
A	Range A from the Pipe I.D. range codes table	
B	Range B from the Pipe I.D. range codes table	
E	Range E from the Pipe I.D. range codes table	
Z	Non-standard Pipe I.D. range codes or line sizes greater than 12-in.	
Pipe material/mounting assembly material		
C	CS (A105)	★
S	316 SST	★
0	No mounting (customer supplied)	★
G	Chrome-moly grade F-11	
N	Chrome-moly grade F-22	
J	Chrome-moly grade F-91	
Piping orientation		
H	Horizontal piping	★
D	Vertical piping with downwards flow	★
U	Vertical piping with upwards flow	★
Annubar type		
P	Pak-lok	★
F	Flanged with opposite side support	★
L	Flange-lok	
G	Gear-drive flo-tap	
M	Manual flo-tap	
Sensor material		
S	316 SST	★
H	Alloy C-276	
Sensor size		
1	Sensor size 1 — line sizes 2- to 8-in. (50 to 200 mm)	★
2	Sensor size 2 — line sizes 6- to 96-in. (150 to 2400 mm)	★
3	Sensor size 3 — line sizes greater than 12-in. (300 mm)	★

Table 3. Rosemount 3051CFA Annubar Flowmeter Ordering Information

The starred offerings (★) represent the most common options and should be selected for best delivery. The non-starred offerings are subject to additional delivery lead time.

Mounting type				
T1	Compression or threaded connection			★
A1	Class 150 RF ANSI			★
A3	Class 300 RF ANSI			★
A6	Class 600RF ANSI			★
D1	DN PN16 flange			★
D3	DN PN40 flange			★
D6	DN PN100 flange			★
A9[2]	Class 900 RF ANSI			
AF[2]	Class 1500 RF ANSI			
AT[2]	Class 2500 RF ANSI			
R1	Class 150 RTJ flange			
R3	Class 300 RTJ flange			
R6	Class 600RTJ flange			
R9[2]	Class 900 RTJ flange			
RF[2]	Class 1500 RTJ flange			
RT[2]	Class 2500 RTJ flange			
Opposite side support or packing gland				
0	No opposite side support or packing gland (required for pak-lok and flange-lok models)			★
	Opposite side support – required for flanged models			
C	NPT threaded opposite support assembly – extended tip			★
D	Welded opposite support assembly – extended tip			★
	Packing gland – required for flo-tap models			
	Packing gland material	**Rod material**	**Packing material**	
J[3]	SST packing gland/cage nipple	CS	PTFE	
K[3]	SST packing gland/cage nipple	SST	PTFE	
L[3]	SST packing gland/cage nipple	CS	Graphite	
N[3]	SST packing gland/cage nipple	SST	Graphite	
R	Alloy C-276 packing gland/cage nipple	SST	Graphite	
Isolation valve for flo-tap models				
0	Not applicable or customer supplied			★
1	Gate valve, CS			
2	Gate valve, SST			
5	Ball valve, CS			
6	Ball valve, SST			
Temperature measurement				
T	Integral RTD – not available with flanged model greater than Class 600			★
0	No temperature sensor			★
R	Remote Thermowell and RTD			

Table 3. Rosemount 3051CFA Annubar Flowmeter Ordering Information

The starred offerings (★) represent the most common options and should be selected for best delivery. The non-starred offerings are subject to additional delivery lead time.

Transmitter connection platform			
3	Direct-mount, Integral 3-valve manifold– not available with flanged model greater than Class 600		★
5	Direct -mount, 5-valve manifold – not available with flanged model greater than Class 600		★
7	Remote-mount NPT connections (1/2-in. NPT)		★
6	Direct-mount, high temperature 5-valve Manifold – not available with flanged model greater than Class 600		
8	Remote-mount SW connections (1/2-in.)		
Differential pressure range			
1	0 to 25 in H_2O (0 to 62,16 mbar)		★
2	0 to 250 in H_2O (0 to 621,60 mbar)		★
3	0 to 1000 in H_2O (0 to 2,48 bar)		★
Transmitter output			
A[4]	4–20 mA with digital signal based on HART Protocol		★
F	FOUNDATION Fieldbus Protocol		★
W[5]	PROFIBUS PA Protocol		★
X[6]	Wireless (requires wireless options and engineered polymer housing)		★
M[7]	Low-power 1–5 Vdc with digital signal based on HART Protocol		
Transmitter housing material		**Conduit entry size**	
A	Aluminum	1/2–14 NPT	★
B	Aluminum	M20 x 1.5	★
J	SST	1/2–14 NPT	★
E	Aluminum, ultra copper low	1/2–14 NPT	
F	Aluminum, ultra copper low	M20 x 1.5	
K	SST	M20 x 1.5	★
P[8]	Engineered polymer	No conduit entries	★
D[9]	Aluminum	G1/2	
M[9]	SST	G1/2	
Transmitter performance class			
1	1.8 percent flow rate accuracy, 8:1 flow turndown, 5-yr. stability		★

Wireless options (requires wireless output code X and Engineered Polymer Housing Code P)

Wireless transmit rate, operating frequency, and protocol		
WA3	User configurable transmit rate, 2.4GHz *Wireless*HART Protocol	★
Antenna and SmartPower		
WP5	Internal antenna, compatible with Green Power Module (I.S. Power Module sold separately)	★

Options (include with selected model number)

Extended product warranty		
WR3	3-year limited warranty	★
WR5	5-year limited warranty	★

Table 3. Rosemount 3051CFA Annubar Flowmeter Ordering Information

The starred offerings (★) represent the most common options and should be selected for best delivery. The non-starred offerings are subject to additional delivery lead time.

Pressure testing[10]		
P1	Hydrostatic testing with certificate	
PX	Extended hydrostatic testing	
Special cleaning		
P2	Cleaning for special services	
PA	Cleaning per ASTM G93 Level D (section 11.4)	
Material testing		
V1	Dye penetrant exam	
Material examination		
V2	Radiographic Examination	
Flow calibration		
W1	Flow calibration (Average K)	
Special inspection		
QC1	Visual and dimensional inspection with certificate	★
QC7	Inspection & performance certificate	★
Surface finish		
RL	Surface finish for low pipe Reynolds number in gas and steam	★
RH	Surface finish for high pipe Reynolds number in liquid	★
Material traceability certification[11]		
Q8	Material Traceability Certification per EN 10474:2004 3.1	★
Code conformance[12]		
J2	ANSI/ASME B31.1	
J3	ANSI/ASME B31.3	
Materials conformance[13]		
J5	NACE MR-0175 / ISO 15156	
Country certification		
J6	European Pressure Directive (PED)	★
J1	Canadian Registration	
Installed in flanged pipe spool section		
H3	Class 150 flanged connection with Rosemount standard length and schedule	
H4	Class 300 flanged connection with Rosemount standard length and schedule	
H5	Class 600 flanged connection with Rosemount standard length and schedule	
Instrument connections for remote mount options		
G2	Needle valves, SST	★
G6	OS&Y gate valve, SST	★
G1	Needle valves, CS	
G3	Needle valves, alloy C-276	
G5	OS&Y gate valve, CS	
G7	OS&Y gate valve, alloy C-276	

Table 3. Rosemount 3051CFA Annubar Flowmeter Ordering Information

The starred offerings (★) represent the most common options and should be selected for best delivery. The non-starred offerings are subject to additional delivery lead time.

Special shipment		
Y1	Mounting hardware shipped separately	★
Special dimensions		
VM	Variable mounting	
VT	Variable tip	
VS	Variable length spool section	
Plantweb control functionality[14]		
A01	FOUNDATION Fieldbus control function block suite	★
Plantweb diagnostic functionality		
DA0[15]	Power Advisory HART diagnostic	★
D01[14]	FOUNDATION Fieldbus diagnostics suite	★
Product certifications		
E8	ATEX Flameproof, Dust	★
I1[16]	ATEX Intrinsic Safety and Dust	★
IA	ATEX FISCO Intrinsic Safety; for FOUNDATION Fieldbus or PROFIBUS PA Protocols only	★
N1	ATEX Type n and Dust	★
K8	ATEX Flameproof, Intrinsic Safety, Type n, Dust (combination of E8, I1 and N1)	★
E5	FM Explosion-proof, Dust Ignition-proof	★
I5[17]	FM Intrinsically Safe, Nonincendive	★
IE	FM FISCO Intrinsically Safe; for FOUNDATION Fieldbus or PROFIBUS PA Protocols only	★
K5	FM Explosion-proof, Dust Ignition-proof, Intrinsically Safe, and Division 2 (combination of E5 and I5)	★
C6	CSA Explosion-proof, Dust Ignition-proof, Intrinsically Safe, and Division 2	★
I6[8]	CSA Intrinsically Safe	★
K6	CSA and ATEX Explosion-proof, Intrinsically Safe, and Division 2 (combination of C6, E8, and I1)	★
E7	IECEx Flameproof, Dust Ignition-proof	★
I7	IECEx Intrinsic Safety	★
N7	IECEx Type n	★
K7	IECEx Flameproof, Dust Ignition-proof, Intrinsic Safety, and Type n (combination of I7, N7, and E7)	★
E2	INMETRO Flameproof	★
I2	INMETRO Intrinsic Safety	★
IB	INMETRO FISCO intrinsically safe; for FOUNDATION Fieldbus or PROFIBUS PA Protocols only	★
K2	INMETRO Flameproof, Intrinsic Safety	★
E3	China Flameproof	★
I3	China Intrinsic Safety	★
KB	FM and CSA Explosion-proof, Dust Ignition-proof, Intrinsically Safe, and Division 2 (combination of K5 and C6)	★
KD	CSA, FM, and ATEX Explosion-proof, Intrinsically Safe (combination of K5, C6, I1, and E8)	★
Sensor fill fluid and O-ring options		
L1[18]	Inert sensor fill fluid (silicone fill fluid is standard)	★
L2	Graphite-filled (PTFE) O-ring	★
LA[18]	Inert sensor fill fluid and graphite-filled (PTFE) O-ring	★

Table 3. Rosemount 3051CFA Annubar Flowmeter Ordering Information

The starred offerings (★) represent the most common options and should be selected for best delivery. The non-starred offerings are subject to additional delivery lead time.

Shipboard approvals[18]		
SBS	American Bureau of Shipping	★
SLL[19]	Lloyds Register (LR)	
Display and interface options		
M4[20]	LCD display with LOI	★
M5	LCD display	★
Transmitter calibration certification		
Q4	Calibration certificate for transmitter	★
Quality certification for safety[15]		
QS	Prior-use certificate of FMEDA data	★
QT	Safety certified to IEC 61508 with certificate of FMEDA	★
Transient protection[18][21]		
T1	Transient terminal block	★
Manifold for remote mount option		
F2	3-valve manifold, SST	★
F6	5-valve manifold, SST	★
F1	3-valve manifold, CS	
F3	3-valve manifold, alloy C-276	
F5	5-valve manifold, CS	
F7	5-valve manifold, alloy C-276	
Lower power output		
C2	0.8–3.2 Vdc output with digital signal based on HART Protocol (available with output code M only)	
Alarm levels[15]		
C4	NAMUR alarm and saturation levels, high alarm	★
CN	NAMUR alarm and saturation levels, low alarm	★
CR	Custom alarm and saturation signal levels, high alarm	★
CS	Custom alarm and saturation signal levels, low alarm	★
CT	Rosemount standard low alarm	★
Configuration buttons		
D4[15]	Analog zero and span	★
DZ[22]	Digital zero trim	★
Ground screw[18][23]		
V5	External ground screw assembly	★
HART Revision configuration (requires HART Protocol output code A)[4]		
HR5	Configured for HART Revision 5	★
HR7	Configured for HART Revision 7	★
Typical model number: 3051CFA D L 060 D C H P S 2 T1 0 0 0 3 2 A A 1		

1. Select configuration buttons (option code D4 or DZ) or LOI (option code M4) if local configuration buttons are required.

2. Available in remote mount applications only.
3. The cage nipple is constructed of Rosemount 304 SST.
4. Option HR5 configures the HART output to HART Revision 5. Option HR7 configures the HART output to HART Revision 7. The device can be field configured to HART Revision 5 or 7 if desired. HART Revision 5 is the default HART output.
5. For local addressing and configuration, M4 LOI is required.
6. Requires wireless options and engineered polymer housing. Available approvals are FM Intrinsically Safe, (option code I5), CSA Intrinsically Safe (option code I6), ATEX Intrinsic Safety (option code I1), and IECEx Intrinsic Safety (option code I7).
7. Only available with C6, E2, E5, I5, K5, KB, and E8 approval. Not available with GE, GM, SBS, DA0, M4, D4, DZ, QT, HR5, HR7, CR, CS, and CT.
8. Only available with wireless (code X).
9. Not available with Product certifications options E8, K8, E5, K5, C6, K6, E7, K7, E2, K2, E3, KB, and KD.
10. Applies to assembled flowmeter only, mounting not tested.
11. Instrument connections for remote mount options and isolation valves for flo-tap models are not included in the Material Traceability Certification.
12. Not available with transmitter connection platform 6.
13. Materials of Construction comply with metallurgical requirements within NACE MR0175/ISO for sour oil field production environments. Environmental limits apply to certain materials. Consult latest standard for details. Selected materials also conform to NACE MR0103 for sour refining environments.
14. Only valid with FOUNDATION Fieldbus (code F).
15. Only available with 4–20 mA HART (code A).
16. Dust approval not applicable to output code X. See "Certificate: AG-0226; AG-0454; AG-0477" on page 62 for wireless approvals.
17. Nonincendive certification not provided with wireless output (code X).
18. Not available with wireless output (code X).
19. Only available with Product certifications E7, E8, I1, I7, IA, K7, K8, KD, N1, and N7
20. Not available with FOUNDATION Fieldbus (output code F) or wireless (output code X) or low power (output code M).
21. The T1 option is not needed with FISCO Product Certifications, transient protection is included with the FISCO Product Certification codes IA, IB, and IE.
22. Only available with 4–20 mA HART (output code A) and wireless (output code X).
23. The V5 option is not needed with the T1 option; external ground screw assembly is included with the T1 option.

Rosemount 3051CFC Compact Flowmeter

Rosemount 3051CFC Compact Flowmeters provide a quick, reliable installation between existing raised face flanges. Depending on your application needs, you can reduce energy loss with the Compact Annubar or minimize straight run requirements with the conditioning orifice.

- Up to 1.8 percent of flow rate accuracy
- Available in 1/2- to 12-in. (15 to 300 mm) line sizes
- Fully assembled and leak tested for out-of-the-box installation
- Power advisory can proactively detect degraded electrical loop integrity issues. (option code DA0)
- LOI with straightforward menus and built-in configuration buttons (option code M4)

Additional information:
Specifications: page 44
Certifications: page 56
Dimensional drawings: page 67

See "Specifications" on page 44 and options for more details on each configuration. Specification and selection of product materials, options, or components must be made by the purchaser of the equipment. See page 53 for more information on material selection.

Table 4. Rosemount 3051CFC Compact Flowmeter Ordering Information

The starred offerings (★) represent the most common options and should be selected for best delivery. The non-starred offerings are subject to additional delivery lead time.

Model[1]	Product description	
3051CFC	Compact Flowmeter	
Measurement type		
D	Differential Pressure	★
Primary element technology		
A	Annubar averaging pitot tube	★
C	Conditioning orifice plate	★
P	Orifice plate	★
Material type		
S	316 SST	★
Line size		
005[2]	1/2-in. (15 mm)	★
010[2]	1-in. (25 mm)	★
015[2]	1 1/2-in. (40 mm)	★
020	2-in. (50 mm)	★
030	3-in. (80 mm)	★
040	4-in. (100 mm)	★
060	6-in. (150 mm)	★
080	8-in. (200 mm)	★
100[3]	10-in. (250 mm)	★
120[3]	12-in. (300 mm)	★
Primary element type		
N000	Rosemount Annubar sensor size 1	★
N040	0.40 beta ratio	★
N050	0.50 beta ratio	
N065[4]	0.65 beta ratio	★

Table 4. Rosemount 3051CFC Compact Flowmeter Ordering Information

The starred offerings (★) represent the most common options and should be selected for best delivery. The non-starred offerings are subject to additional delivery lead time.

Temperature measurement			
0	No temperature sensor		★
R	Remote thermowell and RTD		
Transmitter connection platform			
3	Direct-mount		★
7	Remote-mount, NPT connections		★
Differential pressure range			
1	0 to 25 inH_2O (0 to 62,16 mbar)		★
2	0 to 250 inH_2O (0 to 621,60 mbar)		★
3	0 to 1000 inH_2O (0 to 2,48 bar)		★
Transmitter output			
A[5]	4–20 mA with digital signal based on HART Protocol		★
F	FOUNDATION Fieldbus Protocol		★
W[6]	PROFIBUS PA Protocol		★
X[7]	Wireless (requires wireless options and engineered polymer housing)		★
M[8]	Low-power 1–5 Vdc with digital signal basedon HART Protocol		
Transmitter housing material		**Conduit entry size**	
A	Aluminum	1/2–14 NPT	★
B	Aluminum	M20 x 1.5	★
E	Aluminum, ultra low copper	1/2–14 NPT	
F	Aluminum, ultra low copper	M20 x 1.5	
J	SST	1/2–14 NPT	★
K	SST	M20 x 1.5	★
P[9]	Engineered polymer	No conduit entries	★
D[10]	Aluminum	G1/2	
M[10]	SST	G1/2	
Transmitter performance class			
1	Up to ±1.65% flow rate accuracy, 8:1 flow turndown, 5-year stability		★

Wireless options (requires wireless output code X and engineered polymer housing code P)

Wireless transmit rate, operating frequency, and protocol		
WA3	User configurable transmit rate, 2.4 GHz *Wireless*HART Protocol	★
Antenna and SmartPower		
WP5	Internal antenna, compatible with Green Power Module (I.S. Power Module sold separately)	★

Options (include with selected model number)

Extended product warranty		
WR3	3-year limited warranty	★
WR5	5-year limited warranty	★
Installation accessories		
AB	ANSI alignment ring (Class 150) (only required for 10- and 12-in. (250 and 300mm) line sizes)	★
AC	ANSI alignment ring (Class 300) (only required for 10- and 12-in. (250 and 300mm) line sizes)	★
AD	ANSI alignment ring (Class 600) (only required for 10- and 12-in. (250 and 300mm) line sizes)	★
DG	DIN alignment ring (PN16)	★

Table 4. Rosemount 3051CFC Compact Flowmeter Ordering Information

The starred offerings (★) represent the most common options and should be selected for best delivery. The non-starred offerings are subject to additional delivery lead time.

DH	DIN alignment ring (PN40)	★
DJ	DIN alignment ring (PN100)	★
JB	JIS alignment ring (10K)	
JR	JIS alignment ring (20K)	
JS	JIS alignment ring (40K)	
Remote adapters		
FE	Flange adapters 316 SST (1/2-in NPT)	★
High temperature application		
HT	Graphite valve packing (T_{max} = 850 °F)	
Flow calibration[11]		
WC	Flow calibration, 3 pt, conditioning orifice option C (all pipe schedules)	
WD[12]	Flow calibration, 10 pt, conditioning option C (all schedules), Rosemount Annubar option A (schedule 40)	
Pressure testing		
P1	Hydrostatic testing with certificate	
Special cleaning		
P2[13]	Cleaning for special services	
PA	Cleaning per ASTM G93 level D (section 11.4)	
Special inspection		
QC1	Visual & dimensional inspection with certificate	★
QC7	Inspection and performance certificate	★
Transmitter calibration certification		
Q4	Calibration certificate for transmitter	★
Quality certification for safety[14]		
QS	Prior-use certificate of FMEDA data	★
QT	Safety certified to IEC 61508 with certificate of FMEDA	★
Material traceability certification		
Q8	Material Traceability Certification per EN 10204:2004 3.1	★
Code conformance		
J2	ANSI/ASME B31.1	
J3	ANSI/ASME B31.3	
J4	ANSI/ASME B31.8	
Materials conformance[15]		
J5	NACE MR-0175/ISO 15156	
Country certification		
J1	Canadian Registration	
Product certifications		
E8	ATEX Flameproof, Dust	★
I1[16]	ATEX Intrinsic Safety and Dust	★
IA	ATEX FISCO Intrinsic Safety; for FOUNDATION Fieldbus or PROFIBUS PA Protocols only	★
N1	ATEX Type n and Dust	★
K8	ATEX Flameproof, Intrinsic Safety, Type n, Dust (combination of E8, I1, and N1)	★
E5	FM Explosion-proof, Dust Ignition-proof	★
I5[17]	FM Intrinsically Safe, Nonincendive	★

Table 4. Rosemount 3051CFC Compact Flowmeter Ordering Information

The starred offerings (★) represent the most common options and should be selected for best delivery. The non-starred offerings are subject to additional delivery lead time.

IE	FM FISCO Intrinsically Safe; for FOUNDATION Fieldbus or PROFIBUS PA Protocols only	★
K5	FM Explosion-proof, Dust Ignition-proof, Intrinsically Safe, and Division 2 (combination of E5 and I5)	★
C6	CSA Explosion-proof, Dust Ignition-proof, Intrinsically Safe, and Division 2	★
I6[9]	CSA Intrinsically Safe	★
K6	CSA and ATEX Explosion-proof, Intrinsically Safe, and Division 2 (combination of C6, E8, and I1)	★
E7	IECEx Flameproof, Dust Ignition-proof	★
I7	IECEx Intrinsic Safety	★
N7	IECEx Type n	★
K7	IECEx Flameproof, Dust Ignition-proof, Intrinsic Safety, and Type n (combination of I7, N7, and E7)	★
E2	INMETRO Flameproof	★
I2	INMETRO Intrinsic Safety	★
IB	INMETRO FISCO intrinsically safe; for FOUNDATION Fieldbus or PROFIBUS PA Protocols only	★
K2	INMETRO Flameproof, Intrinsic Safety	★
E3	China Flameproof	★
I3	China Intrinsic Safety	★
KB	FM and CSA Explosion-proof, Dust Ignition-proof, Intrinsically Safe, and Division 2 (combination of K5 and C6)	★
KD	CSA, FM, and ATEX Explosion-proof, Intrinsically Safe (combination of K5, C6, I1, and E8)	★
Sensor fill fluid and O-ring options		
L1[18]	Inert sensor fill fluid	★
L2	Graphite-filled (PTFE) O-ring	★
LA[18]	Inert sensor fill fluid and graphite-filled (PTFE) O-ring	★
Shipboard approvals[18]		
SBS	American Bureau of Shipping	★
SLL[19]	Lloyds Register (LR)	
Display and interface options		
M4[20]	LCD display with LOI	★
M5	LCD display	★
Transient protection[18][21]		
T1	Transient terminal block	★
Manifold for remote mount option		
F2	3-valve manifold, SST	★
F6	5-Valve Manifold, SST	★
Plantweb control functionality[22]		
A01	FOUNDATION Fieldbus Control Function Block Suite	★
Plantweb diagnostic functionality		
DA0[14]	Power Advisory HART Diagnostic	★
D01[22]	FOUNDATION Fieldbus Diagnostic Suite	★
Low power output		
C2	0.8–3.2 Vdc output with digital signal based on HART Protocol (available with output code M only)	
Alarm levels[14]		
C4	NAMUR alarm and saturation levels, high alarm	★
CN	NAMUR alarm and saturation levels, low alarm	★
CR	Custom alarm and saturation signal levels, high alarm	★
CS	Custom alarm and saturation signal levels, low alarm	★
CT	Rosemount standard low alarm	★

Table 4. Rosemount 3051CFC Compact Flowmeter Ordering Information

The starred offerings (★) represent the most common options and should be selected for best delivery. The non-starred offerings are subject to additional delivery lead time.

Ground screw[18][23]		
V5	External ground screw assembly	★
Configuration buttons		
D4[14]	Analog zero and span	★
DZ[24]	Digital zero trim	★
HART Revision Configuration (requires HART Protocol output code A)[5]		
HR5	Configured for HART Revision 5	★
HR7	Configured for HART Revision 7	★
Typical model number: 3051CFC D C S 060 N 065 0 3 2 A A 1 WC E5 M5		

1. Select configuration buttons (option code D4 or DZ) or LOI (option code M4) if local configuration buttons are required.
2. Available with primary element technology P only.
3. 10- and 12-in. (250 and 300 mm) line sizes not available with Primary Element Technology A.
4. For 2-in. (50 mm) line sizes the primary element type is 0.6 for primary element technology (code C).
5. Option HR5 configures the HART output to HART Revision 5. Option HR7 configures the HART output to HART Revision 7. The device can be field configured to HART Revision 5 or 7 if desired. HART Revision 5 is the default HART output.
6. For local addressing and configuration, M4 LOI is required.
7. Requires wireless options and engineered polymer housing. Available approvals are FM Intrinsically Safe, (option code I5), CSA Intrinsically Safe (option code I6), ATEX Intrinsic Safety (option code I1), and IECEx Intrinsic Safety (option code I7).
8. Only available with C6, E2, E5, I5, K5, KB and E8 approval. Not available with GE, GM, SBS, DA0, M4, D4, DZ, QT, HR5, HR7, CR, CS, and CT.
9. Only available with Wireless output code X.
10. Not available with product certifications options E8, K8, E5, K5, C6, K6, E7, K7, E2, K2, E3, KB, and KD.
11. Available with primary element technology C only.
12. For Annubar option A, consult factory for pipe schedules other than schedule 40.
13. Available with primary element technology C or P only.
14. Only available with HART 4–20 mA output code A.
15. Materials of construction comply with metallurgical requirements within NACE MR0175/ISO for sour oil field production environments. Environmental limits apply to certain materials. Consult latest standard for details. Selected materials also conform to NACE MR0103 for sour refining environments.
16. Dust approval not applicable to output code X. See "Certificate: AG-0226; AG-0454; AG-0477" on page 62 for wireless approvals
17. Nonincendive certification not provided with wireless option (code X).
18. Not available with Wireless output code X.
19. Only available with product certifications E7, E8, I1, I7, IA, K7, K8, KD, N1, and N7
20. Not available with output code F - FOUNDATION Fieldbus or Wireless output code X or low power (output code M).
21. The T1 option is not needed with FISCO Product Certifications, transient protection is included with the FISCO Product Certification code IA, IB, and IE.
22. Only valid with FOUNDATION Fieldbus (output code F).
23. The V5 option is not needed with the T1 option; external ground screw assembly is included with the T1 option.
24. Only available with 4–20 mA HART output code A and wireless output code X.

Rosemount 3051CFP Integral Orifice Flowmeter

Rosemount 3051CFP Integral Orifice Flowmeters enable highly accurate flow measurement in small line sizes. Integral Orifice utilize precision honed pipe section for increased accuracy and self-centering plate design to prevent alignment errors that magnify measurement inaccuracies in small line sizes.

- Up to 1.75 percent of flow rate accuracy
- Available in 1/2- to 1 1/2-in. (15 to 40 mm) line sizes
- Fully assembled and leak tested for out-of-the-box installation
- Power advisory can proactively detect degraded electrical loop integrity issues. (option code DA0)
- LOI with straightforward menus and built-in configuration buttons (option code M4)

Additional information:
Specifications: page 44
Certifications: page 56
Dimensional drawings: page 67

See "Specifications" on page 44 and options for more details on each configuration. Specification and selection of product materials, options, or components must be made by the purchaser of the equipment. See page 53 for more information on material selection.

Table 5. Rosemount 3051CFP Integral Orifice Flowmeter Ordering Information

The starred offerings (★) represent the most common options and should be selected for best delivery. The non-starred offerings are subject to additional delivery lead time.

Model[1]	Product description	
3051CFP	Integral Orifice Flowmeter	
Measurement type		
D	Differential Pressure	★
Body material		
S	316 SST	★
Line size		
005	1/2-in. (15 mm)	★
010	1-in. (25 mm)	★
015	1 1/2-in. (40 mm)	★
Process connection		
T1	NPT female body (not available with remote thermowell and RTD)	★
S1[2]	Socket weld body (not available with remote thermowell and RTD)	★
P1	Pipe ends: NPT threaded	★
P2	Pipe ends: beveled	★
D1	Pipe ends: Flanged, DIN PN16, slip-on	★
D2	Pipe ends: Flanged, DIN PN40, slip-on	★
D3	Pipe ends: Flanged, DIN PN100, slip-on	★
W1	Pipe ends: Flanged, RF, ANSI Class 150, weld-neck	★
W3	Pipe ends: Flanged, RF, ANSI Class 300, weld-neck	★
W6	Pipe ends: Flanged, RF, ANSI Class 600, weld-neck	★
A1	Pipe ends: Flanged, RF, ANSI Class 150, slip-on	
A3	Pipe ends: Flanged, RF, ANSI Class 300, slip-on	
A6	Pipe ends: Flanged, RF, ANSI Class 600, slip-on	
R1	Pipe ends: Flanged, RTJ, ANSI Class 150, slip-on	
R3	Pipe ends: Flanged, RTJ, ANSI Class 300, slip-on	
R6	Pipe ends: Flanged, RTJ, ANSI Class 600, slip-on	

Table 5. Rosemount 3051CFP Integral Orifice Flowmeter Ordering Information

The starred offerings (★) represent the most common options and should be selected for best delivery. The non-starred offerings are subject to additional delivery lead time.

Orifice plate material		
S	316 SST	★
H	Alloy C-276	
M	Alloy 400	
Bore size option		
0066	0.066-in. (1.68 mm) for 1/2-in. pipe	★
0109	0.109-in. (2.77 mm) for 1/2-in. pipe	★
0160	0.160-in. (4.06 mm) for 1/2-in. pipe	★
0196	0.196-in. (4.98 mm) for 1/2-in. pipe	★
0260	0.260-in. (6.60 mm) for 1/2-in. pipe	★
0340	0.340-in. (8.64 mm) for 1/2-in. pipe	★
0150	0.150-in. (3.81 mm) for 1-in. pipe	★
0250	0.250-in. (6.35 mm) for 1-in. pipe	★
0345	0.345-in. (8.76 mm) for 1-in. Pipe	★
0500	0.500-in. (12.70 mm) for 1-in. pipe	★
0630	0.630-in. (16.00 mm) for 1-in. pipe	★
0800	0.800-in. (20.32 mm) for 1-in. pipe	★
0295	0.295-in. (7.49 mm) for 1 1/2-in. pipe	★
0376	0.376-in. (9.55 mm) for 1 1/2-in. pipe	★
0512	0.512-in. (13.00 mm) for 1 1/2-in. pipe	★
0748	0.748-in. (19.00 mm) for 1 1/2-in. pipe	★
1022	1.022-in. (25.96 mm) for 1 1/2-in. pipe	★
1184	1.184-in. (30.07 mm) for 1 1/2-in. pipe	★
0010	0.010-in. (0.25 mm) for 1/2-in. pipe	
0014	0.014-in. (0.36 mm) for 1/2-in. pipe	
0020	0.020-in. (0.51 mm) for 1/2-in. pipe	
0034	0.034-in. (0.86 mm) for 1/2-in. pipe	
Transmitter connection platform		
D3	Direct-mount, 3-valve manifold, SST	★
D5	Direct-mount, 5-valve manifold, SST	★
R3	Remote-mount, 3-valve manifold, SST	★
R5	Remote-mount, 5-valve manifold, SST	★
D4	Direct-mount, 3-valve manifold, alloy C-276	
D6	Direct-mount, 5-valve manifold, alloy C-276	
D7	Direct-mount, high temperature, 5-valve manifold, SST	
R4	Remote-mount, 3-valve manifold, alloy C-276	
R6	Remote-mount, 5-valve manifold, alloy C-276	
Differential pressure ranges		
1	0 to 25 inH_2O (0 to 62,16 mbar)	★
2	0 to 250 inH_2O (0 to 621,60 mbar)	★
3	0 to 1000 in H_2O (0 to 2,48 bar)	★
Transmitter output		
A[3]	4–20 mA with digital signal based on HART Protocol	★
F	FOUNDATION Fieldbus Protocol	★
W[4]	PROFIBUS PA Protocol	★
X[5]	Wireless	★
M[6]	Low-power 1–5 Vdc with digital signal based on HART Protocol	

Table 5. Rosemount 3051CFP Integral Orifice Flowmeter Ordering Information

The starred offerings (★) represent the most common options and should be selected for best delivery. The non-starred offerings are subject to additional delivery lead time.

Transmitter housing material		Conduit entry size	
A	Aluminum	1/2–14 NPT	★
B	Aluminum	M20 x 1.5	★
E	Aluminum, ultra low copper	1/2–14 NPT	
F	Aluminum, ultra low copper	M20 x 1.5	
J	SST	1/2–14 NPT	★
K	SST	M20 x 1.5	★
P[7]	Engineered polymer	No conduit entries	★
D[8]	Aluminum	G1/2	
M[8]	SST	G1/2	
Transmitter performance class			
1	up to ±1.8% flow rate accuracy, 8:1 flow turndown, 5-year stability		★

Wireless options (requires Wireless output code X and engineered polymer housing code P)

Wireless transmit rate, operating frequency, and protocol		
WA3	User configurable transmit rate, 2.4GHz *Wireless*HART Protocol	★
Antenna and SmartPower		
WP5	Internal antenna, compatible with Green Power Module (I.S. Power Module sold separately)	★

Options (include with selected model number)

Extended product warranty		
WR3	3-year limited warranty	★
WR5	5-year limited warranty	★
Transmitter body/bolt material		
GT	High temperature (850 °F/454 °C)	
Temperature sensor[9]		
RT	Thermowell and RTD	
Optional connection		
G1	DIN 19213 transmitter connection	★
Pressure testing[10]		
P1	Hydrostatic testing with certificate	
Special cleaning		
P2	Cleaning for special services	
PA	Cleaning per ASTM G93 level D (section 11.4)	
Material testing		
V1	Dye penetrant exam	
Material examination		
V2	Radiographic examination	
Flow calibration[11]		
WD	Discharge coefficient verification	
Special inspection		
QC1	Visual and dimensional inspection with certificate	★
QC7	Inspection and performance certificate	★

Table 5. Rosemount 3051CFP Integral Orifice Flowmeter Ordering Information

The starred offerings (★) represent the most common options and should be selected for best delivery. The non-starred offerings are subject to additional delivery lead time.

Material traceability certification		
Q8	Material traceability certification per EN 10204:2004 3.1	★
Code conformance[12]		
J2	ANSI/ASME B31.1	
J3	ANSI/ASME B31.3	
J4	ANSI/ASME B31.8	
Materials conformance[13]		
J5	NACE MR-0175/ISO 15156	
Country certification		
J6	European Pressure Directive (PED)	★
J1	Canadian Registration	
Transmitter calibration certification		
Q4	Calibration Certificate for Transmitter	★
Quality certification for safety[14]		
QS	Prior-use certificate of FMEDA data	★
QT	Safety certified to IEC 61508 with certificate of FMEDA	★
Product certifications		
E8	ATEX Flameproof, Dust	★
I1[15]	ATEX Intrinsic Safety and Dust	★
IA	ATEX FISCO Intrinsic Safety; for FOUNDATION Fieldbus or PROFIBUS PA Protocols only	★
N1	ATEX Type n and Dust	★
K8	ATEX Flameproof, Intrinsic Safety, Type n, Dust (combination of E8, I1, and N1)	★
E5	FM Explosion-proof, Dust Ignition-proof	★
I5[16]	FM Intrinsically Safe, Nonincendive	★
IE	FM FISCO Intrinsically Safe; for FOUNDATION Fieldbus or PROFIBUS PA Protocols only	★
K5	FM Explosion-proof, Dust Ignition-proof, Intrinsically Safe, and Division 2 (combination of E5 and I5)	★
C6	CSA Explosion-proof, Dust Ignition-proof, Intrinsically Safe, and Division 2	★
I6[7]	CSA Intrinsically Safe	★
K6	CSA and ATEX Explosion-proof, Intrinsically Safe, and Division 2 (combination of C6, E8, and I1)	★
E7	IECEx Flameproof, Dust Ignition-proof	★
I7	IECEx Intrinsic Safety	★
N7	IECEx Type n	★
K7	IECEx Flameproof, Dust Ignition-proof, Intrinsic Safety, and Type n (combination of I7, N7 and E7)	★
E2	INMETRO Flameproof	★
I2	INMETRO Intrinsic Safety	★
IB	INMETRO FISCO intrinsically safe; for FOUNDATION Fieldbus or PROFIBUS PA Protocols only	★
K2	INMETRO Flameproof, Intrinsic Safety	★
E3	China Flameproof	★
I3	China Intrinsic Safety	★
KB	FM and CSA Explosion-proof, Dust Ignition-proof, Intrinsically Safe, and Division 2 (combination of K5 and C6)	★
KD	CSA, FM, and ATEX Explosion-proof, Intrinsically Safe (combination of K5, C6, I1, and E8)	★
Sensor fill fluid and O-ring options		
L1[17]	Inert sensor fill fluid	★
L2	Graphite-filled (PTFE) O-ring	★
LA[17]	Inert sensor fill fluid and graphite-filled (PTFE) O-ring	★

Table 5. Rosemount 3051CFP Integral Orifice Flowmeter Ordering Information

The starred offerings (★) represent the most common options and should be selected for best delivery. The non-starred offerings are subject to additional delivery lead time.

Shipboard approvals[17]		
SBS	American Bureau of Shipping	★
SLL[18]	Lloyds Register (LR)	
Display and interface options		
M4[19]	LCD display with LOI	★
M5	LCD display	★
Transient protection[17][20]		
T1	Transient terminal block	★
Plantweb control functionality[21]		
A01	FOUNDATION Fieldbus control function block suite	★
Plantweb diagnostic functionality		
DA0[14]	Power Advisory HART diagnostic	★
D01[21]	FOUNDATION Fieldbus diagnostic suite	★
Low power output		
C2	0.8–3.2 Vdc output with digital signal based on HART Protocol (available with output code M only)	
Alarm levels[14]		
C4	NAMUR alarm and saturation levels, high alarm	★
CN	NAMUR alarm and saturation levels, low alarm	★
CR	Custom alarm and saturation signal levels, high alarm	★
CS	Custom alarm and saturation signal levels, low alarm	★
CT	Rosemount standard low alarm	★
Ground screw[17][22]		
V5	External ground screw assembly	★
Configuration buttons		
D4[14]	Analog zero and span	★
DZ[23]	Digital zero trim	★
Hart Revision configuration (requires hart protocol output code A)[3]		
HR5	Configured for HART Revision 5	★
HR7	Configured for HART Revision 7	★
Typical model number: 3051CFP D S 010 W1 S 0500 D3 2 A A 1 E5 M5		

1. Select configuration buttons (option code D4 or DZ) or LOI (option code M4) if local configuration buttons are required.
2. To improve pipe perpendicularity for gasket sealing, socket diameter is smaller than standard pipe O.D.
3. Option HR5 configures the HART output to HART Revision 5. Option HR7 configures the HART output to HART Revision 7. The device can be field configured to HART Revision 5 or 7 if desired. HART Revision 5 is the default HART output.
4. For local addressing and configuration, M4 (LOI) is required.
5. Requires wireless options and engineered polymer housing. Available approvals are FM Intrinsically Safe, (option code I5), CSA Intrinsically Safe (option code I6), ATEX Intrinsic Safety (option code I1), and IECEx Intrinsic Safety (option code I7).
6. Only available with C6, E2, E5, I5, K5, KB, and E8 approval. Not available with GE, GM, SBS, DA0, M4, D4, DZ, QT, HR5, HR7, CR, CS, and CT.
7. Only available with wireless output code X.
8. Not available with product certifications options E8, K8, E5, K5, C6, K6, E7, K7, E2, K2, E3, KB, and KD.
9. Thermowell Material is the same as the body material.
10. Does not apply to process connection codes T1 and S1.
11. Not available for bore sizes 0010, 0014, 0020, 0034, 0066, or 0109.
12. Not available with DIN Process Connection codes D1, D2, or D3.

13. Materials of Construction comply with metallurgical requirements within NACE MR0175/ISO for sour oil field production environments. Environmental limits apply to certain materials. Consult latest standard for details. Selected materials also conform to NACE MR0103 for sour refining environments.
14. Only available with HART 4–20 mA output (code A).
15. Dust approval not applicable to output code X. See "Certificate: AG-0226; AG-0454; AG-0477" on page 62 for wireless approvals.
16. Nonincendive certification not provided with Wireless output (code X).
17. Not available with wireless output code X.
18. Only available with product certifications E7, E8, I1, I7, IA, K7, K8, KD, N1, and N7.
19. Not available with FOUNDATION Fieldbus (code F) or wireless output (code X) or low power (code M).
20. The T1 option is not needed with FISCO Product Certifications, transient protection is included with the FISCO Product Certification code IA, IB, and IE.
21. Only valid with FOUNDATION Fieldbus output code F.
22. The V5 option is not needed with the T1 option; external ground screw assembly is included with the T1 option.
23. Only available with 4–20 mA (code A) and wireless (code X).

Rosemount 3051L Level Transmitter

The Rosemount 3051L Level Transmitter combines the performance and capabilities of Rosemount 3051 Transmitters with the reliability and quality of a direct mount seal in one model number. 3051L Level Transmitters offer a variety of process connections, configurations, and fill fluid types to meet a breadth of level applications. Capabilities of a Rosemount 3051L Level Transmitter include:

- Quantify and optimize total system performance (option code QZ)
- Tuned-System Assembly (option code S1)
- Power advisory can proactively detect degraded electrical loop integrity issues (option code DA0)
- LOI with straightforward menus and built-in configuration buttons (option code M4)

Additional information:
Specifications: page 44
Certifications: page 56
Dimensional drawings: page 67

See Specifications and options for more details on each configuration. Specification and selection of product materials, options, or components must be made by the purchaser of the equipment. See page 53 for more information on material selection.

Table 6. Rosemount 3051L Level Transmitter Ordering Information

The starred offerings (★) represent the most common options and should be selected for best delivery. The non-starred offerings are subject to additional delivery lead time.

Model[1]	Transmitter type			
3051L	Level Transmitter			
Pressure range				
2	–250 to 250 inH_2O (–621,60 to 621,60 mbar)			★
3	–1000 to 1000 inH_2O (–2,48 to 2,48 bar)			★
4	–300 to 300 psi (–20,68 to 20,68 bar)			★
Transmitter output				
A[2]	4–20 mA with digital signal based on HART Protocol			★
F	FOUNDATION Fieldbus Protocol			★
W[3]	PROFIBUS PA Protocol			★
X[4]	Wireless (requires wireless options and engineered polymer housing)			★
M[5]	Low-power 1–5 Vdc with digital signal based on HART Protocol			
Process connection size, material, extension length (high side)				
Code	**Process connection size**	**Material**	**Extension length**	
G0[6]	2-in./DN 50/A	316L SST	Flush mount only	★
H0[6]	2-in./DN 50	Alloy C-276	Flush mount only	★
J0	2-in./DN 50	Tantalum	Flush mount only	★
A0[6]	3-in./DN 80	316L SST	Flush mount	★
A2[6]	3-in./DN 80	316L SST	2-in./50 mm	★
A4[6]	3-in./DN 80	316L SST	4-in./100 mm	★
A6[6]	3-in./DN 80	316L SST	6-in./150 mm	★
B0[6]	4-in./DN 100	316L SST	Flush mount	★

Table 6. Rosemount 3051L Level Transmitter Ordering Information

The starred offerings (★) represent the most common options and should be selected for best delivery. The non-starred offerings are subject to additional delivery lead time.

B2[6]	4-in./DN 100	316L SST	2-in./50 mm	★
B4[6]	4-in./DN 100	316L SST	4-in./100 mm	★
B6[6]	4-in./DN 100	316L SST	6-in./150 mm	★
C0[6]	3-in./DN 80	Alloy C-276	Flush mount	★
C2[6]	3-in./DN 80	Alloy C-276	2-in./50 mm	★
C4[6]	3-in./DN 80	Alloy C-276	4-in./100 mm	★
C6[6]	3-in./DN 80	Alloy C-276	6-in./150 mm	★
D0[6]	4-in./DN 100	Alloy C-276	Flush Mount	★
D2[6]	4-in./DN 100	Alloy C-276	2-in./50 mm	★
D4[6]	4-in./DN 100	Alloy C-276	4-in./100 mm	★
D6[6]	4-in./DN 100	Alloy C-276	6-in./150 mm	★
E0	3-in./DN 80	Tantalum	Flush mount only	★
F0	4-in./DN 100	Tantalum	Flush mount only	★
Mounting flange size, rating, material (high side)				
	Size	**Rating**	**Material**	
M	2-in.	ANSI/ASME B16.5 Class 150	CS	★
A	3-in.	ANSI/ASME B16.5 Class 150	CS	★
B	4-in.	ANSI/ASME B16.5 Class 150	CS	★
N	2-in.	ANSI/ASME B16.5 Class 300	CS	★
C	3-in.	ANSI/ASME B16.5 Class 300	CS	★
D	4-in.	ANSI/ASME B16.5 Class 300	CS	★
P	2-in.	ANSI/ASME B16.5 Class 600	CS	★
E	3-in.	ANSI/ASME B16.5 Class 600	CS	★
X[6]	2-in.	ANSI/ASME B16.5 Class 150	316 SST	★
F[6]	3-in.	ANSI/ASME B16.5 Class 150	316 SST	★
G[6]	4-in.	ANSI/ASME B16.5 Class 150	316 SST	★
Y[6]	2-in.	ANSI/ASME B16.5 Class 300	316 SST	★
H[6]	3-in.	ANSI/ASME B16.5 Class 300	316 SST	★
J[6]	4-in.	ANSI/ASME B16.5 Class 300	316 SST	★
Z[6]	2-in.	ANSI/ASME B16.5 Class 600	316 SST	★
L[6]	3-in.	ANSI/ASME B16.5 Class 600	316 SST	★
Q	DN 50	PN 10-40 per EN 1092-1	CS	★
R	DN 80	PN 40 per EN 1092-1	CS	★
S	DN 100	PN 40 per EN 1092-1	CS	★
V	DN 100	PN 10/16 per EN 1092-1	CS	★
K[6]	DN 50	PN 10-40 per EN 1092-1	316 SST	★
T[6]	DN 80	PN 40 per EN 1092-1	316 SST	★
U[6]	DN 100	PN 40 per EN 1092-1	316 SST	★
Mounting flange size, rating, material (high side)				
	Size	**Rating**	**Material**	
W[6]	DN 100	PN 10/16 per EN 1092-1	316 SST	★
7[6]	4 in.	ANSI/ASME B16.5 Class 600	316 SST	★

Table 6. Rosemount 3051L Level Transmitter Ordering Information

The starred offerings (★) represent the most common options and should be selected for best delivery. The non-starred offerings are subject to additional delivery lead time.

1	N/A	10K per JIS B2238	CS	
2	N/A	20K per JIS B2238	CS	
3	N/A	40K per JIS B2238	CS	
4[6]	N/A	10K per JIS B2238	316 SST	
5[6]	N/A	20K per JIS B2238	316 SST	
6[6]	N/A	40K per JIS B2238	316 SST	
Seal fill fluid (high side)		**Specific gravity**	**Temperature limits (ambient temperature of 70° F [21° C])**	
D	Silicone 200	0.93	–49 to 401 °F (–45 to 205 °C)	★
F	Silicone 200 for Vacuum Applications	0.93	For use in vacuum applications below 14.7 psia (1 bar-a), refer to vapor pressure curves in Rosemount DP Level Fill Fluid Specification Technical Note.	★
L	Dow Corning® 704 Diffusion Pump Fluid	1.07	32 to 401 °F (0 to 205 °C)	★
C	D.C. Silicone 704 for Vacuum Applications	1.07	For use in vacuum applications below 14.7 psia (1 bar-a), refer to vapor pressure curves in Rosemount DP Level Fill Fluid Specification Technical Note.	★
R	Silicone 705	1.09	68 to 401 °F (20 to 205 °C)	★
V	Silicone 705 for Vacuum Applications	1.09	For use in vacuum applications below 14.7 psia (1 bar-a), refer to vapor pressure curves in Rosemount DP Level Fill Fluid Specification Technical Note.	★
A	SYLTHERM™ XLT	0.85	–102 to 293 °F (–75 to 145 °C)	★
H	Inert (halocarbon)	1.85	–49 to 320 °F (–45 to 160 °C)	★
G	Glycerin and water	1.13	5 to 203 °F (–15 to 95 °C)	★
N	Neobee® M-20	0.92	5 to 401 °F (–15 to 205 °C)	★
P	Propylene glycol and water	1.02	5 to 203 F (–15 to 95 °C)	★
Low pressure side				
	Configuration	**Flange adapter**	**Diaphragm material**	**Sensor fill fluid**
11[6]	Gage	SST	316L SST	Silicone ★
21	Differential	SST	316L SST	Silicone ★
22[6]	Differential	SST	Alloy *C-276*	Silicone ★
2A[7]	Differential	SST	316L SST	Inert (halocarbon) ★
2B[6][7]	Differential	SST	Alloy *C-276*	Inert (halocarbon) ★
31[6]	Tuned-System Assembly with Remote Seal	None	316L SST	Silicone (requires option code S1) ★
O-ring				
A	Glass-filled PTFE			★
Housing material		**Conduit entry size**		
A	Aluminum	1/2–14 NPT		★
B	Aluminum	M20 x 1.5		★
E	Aluminum, ultra low copper	1/2–14 NPT		
F	Aluminum, ultra low copper	M20 x 1.5		

Table 6. Rosemount 3051L Level Transmitter Ordering Information

The starred offerings (★) represent the most common options and should be selected for best delivery. The non-starred offerings are subject to additional delivery lead time.

J	SST	1/2–14 NPT	★
K	SST	M20 x 1.5	★
P[8]	Engineered polymer	No conduit entries	★
D[9]	Aluminum	G1/2	
M[9]	SST	G1/2	

Wireless options (requires wireless output code X and engineered polymer housing code P)

Wireless transmit rate, operating frequency, and protocol		
WA3	User configurable transmit rate, 2.4GHz *Wireless*HART Protocol	★
Antenna and SmartPower		
WP5	Internal antenna, compatible with Green Power Module (I.S. Power Module sold separately)	★

Options (include with selected model number)

Extended product warranty		
WR3	3-year limited warranty	★
WR5	5-year limited warranty	★
Plantweb control functionality[10]		
A01	FOUNDATION Fieldbus Control Function Block Suite	★
Plantweb diagnostic functionality		
DA0[18]	Power advisory HART diagnostic	★
D01[10]	FOUNDATION Fieldbus diagnostics suite	★
Seal assemblies[11]		
S1	Assembled to One Rosemount 1199 Seal	★
Product certifications		
E8	ATEX Flameproof and Dust Certification	★
I1[12]	ATEX Intrinsic Safety and Dust	★
IA	ATEX FISCO Intrinsic Safety; for FOUNDATION Fieldbus or PROFIBUS PA Protocols only	★
N1	ATEX Type n Certification and Dust	★
K8	ATEX Flameproof, Intrinsic Safety, Type n, Dust (combination of E8, I1, and N1)	★
E4[13]	TIIS Flameproof	★
E5	FM Explosion-proof, Dust Ignition-proof	★
I5[14]	FM Intrinsically Safe, Nonincendive	★
IE	FM FISCO Intrinsically Safe; for FOUNDATION Fieldbus or PROFIBUS PA Protocols only	★
K5	FM Explosion-proof, Dust Ignition-Proof, Intrinsically Safe, and Division 2	★
C6	CSA Explosion-proof, Dust Ignition-proof, Intrinsically Safe, and Division 2	★
I6[8]	CSA Intrinsic Safety	★
K6	CSA and ATEX Explosion-proof, Intrinsically Safe, and Division 2 (combination of C6, E8, and I1)	★
E7	IECEx Flameproof, Dust Ignition-proof	★
I7	IECEx Intrinsic Safety	★
N7	IECEx Type n Certification	★
K7	IECEx Flameproof, Dust Ignition-proof, Intrinsic Safety, and Type n (combination of I7, N7, and E7)	★
E2	INMETRO Flameproof	★

Table 6. Rosemount 3051L Level Transmitter Ordering Information

The starred offerings (★) represent the most common options and should be selected for best delivery. The non-starred offerings are subject to additional delivery lead time.

I2	INMETRO Intrinsic Safety	★
IB	INMETRO FISCO intrinsically safe; for FOUNDATION Fieldbus or PROFIBUS PA Protocols only	★
K2	INMETRO Flameproof, Intrinsic Safety	★
E3	China Flameproof	★
I3	China Intrinsic Safety	★
N3	China Type n	★
EM	Technical Regulations Customs Union (EAC) Flameproof	★
IM	Technical Regulations Customs Union (EAC) Intrinsic Safety	★
KM	Technical Regulations Customs Union (EAC) Flameproof and Intrinsic Safety	★
KB	FM and CSA Explosion-proof, Dust Ignition Proof, Intrinsically Safe, and Division 2 (combination of K5 and C6)	★
KD	FM, CSA, and ATEX Explosion-proof, Intrinsically Safe (combination of K5, C6, I1, and E8)	★
Shipboard approvals[7]		
SBS	American Bureau of Shipping	★
SBV[15]	Bureau Veritas (BV)	
SDN	Det Norske Veritas	
SLL[15]	Lloyds Register (LR)	
Bolting material		
L4	Austenitic 316 SST bolts	★
L5	ASTM A 193, grade B7M bolts	★
L6	Alloy K-500 Bolts	★
L8	ASTM A 193 Class 2, grade B8M bolts	★
Display and interface options		
M4[16]	LCD display with LOI	★
M5	LCD display	★
Calibration certification		
Q4	Calibration Certificate	★
QP	Calibration Certificate and tamper evident seal	★
QG[17]	Calibration Certificate and GOST Verification Certificate	★
Material traceability certification		
Q8	Material Traceability Certification per EN 10204 3.1	★
Quality certification for safety[18]		
QS	Prior-use certificate of FMEDA data	★
QT	Safety certified to IEC 61508 with certificate of FMEDA	★
Toolkit total system performance reports		
QZ	Seal system performance calculation report	★
Conduit electrical connector[7]		
GE	M12, 4-pin, male connector (eurofast)	★
GM	A size Mini, 4-pin, male connector (minifast)	★
Configuration buttons		
D4[18]	Analog zero and span	★
DZ[19]	Digital zero trim	★

Table 6. Rosemount 3051L Level Transmitter Ordering Information

The starred offerings (★) represent the most common options and should be selected for best delivery. The non-starred offerings are subject to additional delivery lead time.

Transient protection[7][20]				
T1	Transient protection			★
Software configuration[19]				
C1	Custom Software Configuration (For wired, see the Rosemount 3051 Configuration Data Sheet. For wireless, see the Rosemount 3051 Wireless Configuration Data Sheet.)			★
Low power output				
C2	0.8–3.2 Vdc output with digital signal based on HART Protocol (available with output code M only)			
Alarm levels[18]				
C4	NAMUR alarm and saturation levels, high alarm			★
CN	NAMUR alarm and saturation levels, low alarm			★
CR	Custom alarm and saturation signal levels, high alarm (requires C1 and Rosemount 3051 Configuration Data Sheet)			★
CS	Custom alarm and saturation signal levels, low alarm (requires C1 and Rosemount 3051 Configuration Data Sheet)			★
CT	Rosemount Standard low alarm			★
Conduit plug				
DO	316 SST Conduit Plug			★
Ground screw[7][21]				
V5	External ground screw assembly			★
Lower housing flushing connection options				
	Ring material	**Number**	**Size (NPT)**	
F1	316 SST	1	1/4–18 NPT	★
F2	316 SST	2	1/4–18 NPT	★
F3	Alloy C-276	1	1/4–18 NPT	★
F4	Alloy C-276	2	1/4–18 NPT	★
F7	316 SST	1	1/2–14 NPT	★
F8	316 SST	2	1/2–14 NPT	★
F9	Alloy C-276	1	1/2–14 NPT	★
F0	Alloy C-276	2	1/2–14 NPT	★
Lower housing intermediate gasket material				
S0	No gasket for lower housing			★
SY[22]	Thermo-Tork® TN-9000			★
NACE certificate[23]				
Q15	Certificate of compliance to NACE MR0175/ISO 15156 for wetted materials			★
Q25	Certificate of compliance to NACE MR0103 for wetted materials			★
HART Revision configuration[2] (requires HART Protocol output code A)				
HR5	Configured for HART Revision 5			★
HR7	Configured for HART Revision 7			★
Typical model number: 3051L 2 A A0 D 21 A A F1				

1. Select configuration buttons (option code D4 or DZ) or LOI (option code M4) if local configuration buttons are required.
2. Option HR5 configures the HART output to HART Revision 5. Option HR7 configures the HART output to HART Revision 7. The device can be field configured to HART Revision 5 or 7 if desired. HART Revision 5 is the default HART output.
3. Option code M4 - LCD display with LOI required for local addressing and configuration.
4. Requires wireless options and engineered polymer housing. Available approvals are FM Intrinsically Safe, (option code I5), CSA Intrinsically Safe (option code I6), ATEX Intrinsic Safety (option code I1), IECEx Intrinsic Safety (option code I7) and EAC Intrinsic Safety (option code IM).
5. Only available with C6, E2, E5, I5, K5, KB, and E8 approval. Not available with GE, GM, SBS, DA0, M4, D4, DZ, QT, HR5, HR7, CR, CS, and CT.
6. Materials of Construction comply with metallurgical requirements highlighted within NACE MR0175/ISO 15156 for sour oil field production environments. Environmental limits apply to certain materials. Consult latest standard for details. Selected materials also conform to NACE MR0103 for sour refining environments.
7. Not available with wireless output code X.
8. Only available with wireless output code X.
9. Not available with product certifications options E8, K8, E5, K5, C6, K6, E7, K7, E2, K2, E3, KB, and KD.
10. Only valid with FOUNDATION Fieldbus output code F.
11. “Assemble-to” items are specified separately and require a completed model number.
12. Dust approval not applicable to output code X. See “Certificate: AG-0226; AG-0454; AG-0477” on page 62 for wireless approvals.
13. Only available with output codes A - 4–20mA HART, F - FOUNDATION Fieldbus, and W - PROFIBUS PA. Also only available with G1/2 housing thread types.
14. Nonincendive certification not provided with Wireless output code X.
15. Only available with product certifications E7, E8, I1, I7, IA, K7, K8, KD, N1, and N7.
16. Not available with FOUNDATION Fieldbus (output code F) or wireless (output code X) or low power (output code M).
17. Contact an Emerson representative for availability.
18. Only available with HART 4–20 mA output code A).
19. Only available with 4–20 mA HART (output code A) and Wireless (output code X).
20. The T1 option is not needed with FISCO Product Certifications; transient protection is included in the FISCO product certification codes IA, IB, and IE.
21. The V5 option is not needed with the T1 option; external ground screw assembly is included with the T1 option.
22. Gasket provided when lower housing is ordered.
23. NACE compliant wetted materials are identified by Footnote 6.

Specifications

Performance specifications

This product data sheet covers HART, *Wireless*HART, FOUNDATION Fieldbus, and PROFIBUS PA unless specified.

Conformance to specification (±3σ [Sigma])

Technology leadership, advanced manufacturing techniques, and statistical process control ensure specification conformance to at least ±3σ.

Reference accuracy

Stated reference accuracy equations include terminal based linearity, hysteresis, and repeatability. For wireless, FOUNDATION Fieldbus and PROFIBUS PA devices, use calibrated range in place of span.

Models	Rosemount 3051 and *Wireless*HART Protocol
Rosemount 3051C[1]	
Range 5	±0.065% of span For spans less than 10:1, accuracy = $\pm\left[0.015 + 0.005\left(\frac{URL}{Span}\right)\right]$% of Span
Ranges 2–4	± 0.04% of span[2] For spans less than 10:1[3], accuracy = $\pm\left[0.015 + 0.005\left(\frac{URL}{Span}\right)\right]$% of Span
Range 1	± 0.10% of span For spans less than 15:1, accuracy = $\pm\left[0.025 + 0.005\left(\frac{URL}{Span}\right)\right]$% of Span
Range 0 (CD)	± 0.10% of span For spans less than 2:1, accuracy = ± 0.05% of URL
Rosemount 3051CA	
Ranges 1–4	± 0.04% of span[2] For spans less than 10:1, accuracy = $\pm\left[0.0075\left(\frac{URL}{Span}\right)\right]$% of Span
Rosemount 3051T[4]	
Ranges 1–4	± 0.04% of span[2] For spans less than 10:1, accuracy = $\pm\left[0.0075\left(\frac{URL}{Span}\right)\right]$% of Span
Range 5–6	± 0.075% of span For spans less than 10:1, accuracy = $\pm\left[0.0075\left(\frac{URL}{Span}\right)\right]$% of Span
Rosemount 3051L	
Ranges 2-4	± 0.075% of span For spans less than 10:1, accuracy = $\pm\left[0.025 + 0.005\left(\frac{URL}{Span}\right)\right]$% of Span

1. For Rosemount 3051C and 3051T with 1199 assemble to code S1, use Rosemount 3051L specification.
2. For output code W and M, ±0.065% span.
3. For output code F, for span less than 5:1.
4. For Rosemount 3051C and 3051T with 1199 assemble to code S1, use Rosemount 3051L specification.

Flow performance - flow reference accuracy[1]

Rosemount 3051CFA Annubar Flowmeter		
Ranges 2–3		±1.80% of flow rate at 8:1 flow turndown
Rosemount 3051CFC_A Compact Annubar Flowmeter – Rosemount Annubar option A		
Ranges 2–3	Uncalibrated	±2.10% of flow rate at 8:1 flow turndown
	Calibrated	±1.80% of flow rate at 8:1 flow turndown
Rosemount 3051CFC_C Compact Orifice Flowmeter – conditioning option C		
Ranges 2–3	β = 0.4	±1.75% of flow rate at 8:1 flow turndown
	β = 0.50, 0.65	±1.95% of flow rate at 8:1 flow turndown
Rosemount 3051CFC_P Compact Orifice Flowmeter – orifice type option P[2]		
Ranges 2–3	β = 0.4	±2.00% of flow rate at 8:1 flow turndown
	β = 0.65	±2.00% of flow rate at 8:1 flow turndown
Rosemount 3051CFP Integral Orifice Flowmeter		
Ranges 2–3	β <0.1	±3.00% of flow rate at 8:1 flow turndown
	0.1<β <0.2	±1.95% of flow rate at 8:1 flow turndown
	0.2<β <0.6	±1.75% of flow rate at 8:1 flow turndown
	0.6<β <0.8	±2.15% of flow rate at 8:1 flow turndown

1. Accuracy over range of use is always application dependent. Range 1 flowmeters may experience an additional uncertainty up to 0.9 percent. Consult your Emerson representative for exact specifications.
2. Applicable to 2- to 12-in. line sizes. For smaller line sizes, see the Rosemount DP Flowmeters and Primary Elements Product Data Sheet.

Total performance

Total performance is based on combined errors of reference accuracy, ambient temperature effect, and static pressure effect at normal operating conditions (70 percent of span typical reading, 740 psi (51,02 bar) line pressure).

For ±50 °F (28 °C) temperature changes; 0–100% relative humidity, from 1:1 to 5:1 rangedown

Models	Total performance[1]
Rosemount 3051C Ranges 2–5	± 0.14% of span
Rosemount 3051T Ranges 1–4	± 0.14% of span
Rosemount 3051L Ranges 2–4	Use Instrument Toolkit™ or the QZ option to quantify the total performance of a remote seal assembly under operating conditions.

1. For output code W, F and M, total performance is ±0.15% of span.

Long term stability

Models	Long term stability
Rosemount 3051C Ranges 2–5	±0.2% of URL for 10 years ±50 °F (28 °C) temperature changes, and up to 1000 psi (68,95 bar) line pressure.
Rosemount 3051CD, 3051CG Low/Draft Range Ranges 0–1	±0.2% of URL for 1 year
Rosemount 3051CA Low Range Range 1	±0.2% of URL for 10 years ±50 °F (28 °C) temperature changes, and up to 1000 psi (68,95 bar) line pressure.
Rosemount 3051T Ranges 1–4	±0.2% of URL for 10 years ±50 °F (28 °C) temperature changes, and up to 1000 psi (68,95 bar) line pressure.
Rosemount 3051L Ranges 2–3 Ranges 4–5	 ±0.1% of URL for 1 year ±0.2% of URL for 1 year

Dynamic performance

	4–20 mA HART[1]	FOUNDATION Fieldbus and PROFIBUS PA Protocols[3]	Typical HART transmitter response time
Total response time (T_d + T_c)[2]:			
Rosemount 3051C Ranges 2–5 Range 1 Range 0 Rosemount 3051T Rosemount 3051L	 100 ms 255 ms 700 ms 100 ms See Instrument Toolkit.	 152 ms 307 ms N/A 152 ms See Instrument Toolkit.	
Dead time (Td)	45 ms (nominal)	97 ms	
Update rate[4]	22 times per second	22 times per second	

1. Dead time and update rate apply to all models and ranges; analog output only.
2. Nominal total response time at 75 °F (24 °C) reference conditions.
3. Transducer block response time, Analog Input block execution time not included.
4. Does not apply to wireless (output code X). See "Wireless (output code X)" on page 51 for wireless update rate.

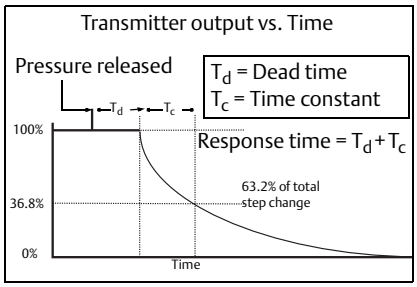

Line pressure effect per 1000 psi (68,95 bar)

For line pressures above 2000 psi (137,90 bar) and Ranges 4–5, see the following documents.
For HART, see the Rosemount 3051 Reference Manual. For *Wireless*HART, see the Rosemount 3051 Wireless Reference Manual.
For FOUNDATION Fieldbus, see the Rosemount 3051 Reference Manual. For PROFIBUS PA, see the Rosemount 3051 Reference Manual.

Models	Line pressure effect
Rosemount 3051CD, 3051CF	**Zero error**
Ranges 2–3	±0.05% of URL/1000 psi (68,95 bar) for line pressures from 0 to 2000 psi (0 to 137,90 bar)
Range 1	±0.25% of URL/1000 psi (68,95 bar) for line pressures from 0 to 2000 psi (0 to 137,90 bar)
Range 0	±0.125% of URL/100 psi (6,89 bar) for line pressures from 0 to 750 psi (0 to 51,71 bar)
	Span error
Ranges 2–3	±0.1% of reading/1000 psi (68,95 bar)
Range 1	±0.4% of reading/1000 psi (68,95 bar)
Range 0	±0.15% of reading/100 psi (6,895 bar)

Ambient temperature effect per 50 °F (28 °C)

Models	Ambient temperature effect
Rosemount 3051C Ranges 2–5	±(0.0125% URL + 0.0625% span) from 1:1 to 5:1 ±(0.025% URL + 0.125% span) from 5:1 to 150:1
Range 1	±(0.1% URL + 0.25% span) from 1:1 to 30:1 ±(0.14% URL + 0.15% span) from 30:1 to 50:1
Range 0	±(0.25% URL + 0.05% span) from 1:1 to 30:1
Rosemount 3051CA Ranges 1–4	±(0.025% URL + 0.125% span) from 1:1 to 30:1 ±(0.035% URL + 0.125% span) from 30:1 to 150:1
Rosemount 3051T Range 2–4	±(0.025% URL + 0.125% span) from 1:1 to 30:1 ±(0.035% URL + 0.125% span) from 30:1 to 150:1
Range 1	±(0.025% URL + 0.125% span) from 1:1 to 10:1 ±(0.05% URL + 0.125% span) from 10:1 to 100:1
Range 5–6	±(0.1% URL + 0.15% span) from 1:1 to 5:1
Rosemount 3051L	See instrument toolkit software.

Mounting position effects

Models	Mounting position effects
Rosemount 3051C	Zero shifts up to ±1.25 inH_2O (3,11 mbar), which can be calibrated out. No span effect.
Rosemount 3051CA, 3051T	Zero shifts up to ±2.5 inH_2O (6,22 mbar), which can be calibrated out. No span effect.
Rosemount 3051L	With liquid level diaphragm in vertical plane, zero shift of up to ±1 inH_2O (2,49 mbar). With diaphragm in horizontal plane, zero shift of up to ±5 inH_2O (12,43 mbar) plus extension length on extended units. All zero shifts can be calibrated out. No span effect.

Vibration effect

Less than ±0.1% of URL when tested per the requirements of IEC60770-1: 1999 field or pipeline with high vibration level (10–60 Hz 0.21 mm displacement peak amplitude/60–2000 Hz 3g).

Power supply effect

Less than ±0.005% of calibrated span per volt change

Electromagnetic compatibility (EMC)

Meets all relevant requirements of EN61326-1:2006 and Namur NE-21.[(1)]

1. NAMUR NE-21 does not apply to wireless output code X.

Transient protection (option code T1)

Tested in accordance with IEEE C62.41.2-2002, location category B
- 6 kV crest (0.5 µs - 100 kHz)
- 3 kA crest (8 x 20 µs)
- 6 kV crest (1.2 x 50 µs)

Functional specifications

Range and sensor limits

Table 7. Rosemount 3051CD, 3051CG, 3051CF, and 3051L Range and Sensor Limits

Range[1]	Minimum span	Range and sensor limits				
			Lower (LRL)			
	Rosemount 3051CD, 3051CG, 3051CF, 3051L[2]	Upper (URL)	Rosemount 3051CD differential, 3051CF Flowmeters	Rosemount 3051CG gage[3]	Rosemount 3051L differential	Rosemount 3051L gage[3]
0	0.10 inH_2O (0,24 mbar)	3.00 inH_2O (7,45 mbar)	–3.00 inH_2O (–7,45 mbar)	N/A	N/A	N/A
1	0.50 inH_2O (1,24 mbar)	25.00 inH_2O (62,16 mbar)	–25.00 inH_2O (–62,16 mbar)	–25.00 inH_2O (–62,16 mbar)	N/A	N/A
2	1.67 inH_2O (4,15 mbar)	250.00 inH_2O (621,60 mbar)	–250.00 inH_2O (–621,60 mbar)	–250.00 inH_2O (–621,60 mbar)	–250.00 inH_2O (–621,60 mbar)	–250.00 inH_2O (–621,60 mbar)
3	6.67 inH_2O (16,58 mbar)	1000.00 inH_2O (2,48 bar)	–1000.00 inH_2O (–2,48 bar)	0.50 psia (34,47 mbar)	–1000.00 inH_2O (–2,48 bar)	0.50 psia (34,47 mbar)
4	2.00 psi (137,89 mbar)	300.00 psi (20,68 bar)	–300.00 psi (–20,68 bar)	0.50 psia (34,47 mbar)	–300.00 psi (–20,68 bar)	0.50 psia (34,47 mbar)
5	13.33 psi (919,01 mbar)	2000.00 psi (137,89 bar)	– 2000.00 psi (–137,89 bar)	0.50 psia (34,47 mbar)	N/A	N/A

1. Range 0 only available with Rosemount 3051CD. Range 1 only available with Rosemount 3051CD, 3051CG, or 3051CF. inH_2O referenced at 68 °F.
2. For outputs options W and M, minimum span are: Range 1 - 0.50 inH_2O (1,24 mbar), range 2 - 2.50 inH_2O (6,21 mbar), range 3 - 10.00 inH_2O (24,86 mbar), range 4 - 3.00 psi (0,21 bar), range 5 - 20.00 psi (1,38 bar).
3. Assumes atmospheric pressure of 14.7 psig.

Table 8. Rosemount 3051CA and 3051T Range and Sensor Limits

Range	Rosemount 3051CA			Range	Rosemount 3051T			
	Minimum span[1]	Range and sensor limits			Minimum span[1]	Range and sensor limits		Lower[2] (LRL) (gage)
	Upper (URL)		Lower (LRL)		Upper (URL)		Lower (LRL) (absolute)	
1	0.30 psi (20,68 mbar)	30 psia (2,06 bar)	0 psia (0 bar)	1	0.30 psi (20,68 mbar)	30.00 psi (2,06 bar)	0 psia (0 bar)	–14.70 psig (–1,01 bar)
2	1.00 psi (68,94 mbar)	150 psia (10,34 bar)	0 psia (0 bar)	2	1.00 psi (68,94 mbar)	150.00 psi (10,34 bar)	0 psia (0 bar)	–14.70 psig (–1,01 bar)
3	5.33 psi (367,49 mbar)	800 psia (55,15 bar)	0 psia (0 bar)	3	5.33 psi (367,49 mbar)	800.00 psi (55,15 bar)	0 psia (0 bar)	–14.70 psig (–1,01 bar)
4	26.67 psi (1,83 bar)	4000 psia (275,79 bar)	0 psia (0 bar)	4	26.67 psi (1,83 bar)	4000.00 psi (275,79 bar)	0 psia (0 bar)	–14.70 psig (–1,01 bar)
5	N/A	N/A	N/A	5	2000.00 psi (137,89 bar)	10000.00 psi (689,47 bar)	0 psia (0 bar)	–14.70 psig (–1,01 bar)
6	N/A	N/A	N/A	6	4000.00 psi (275,79 bar)	20000.00 psi (1378,95 bar)	0 psia (0 bar)	–14.70 psig (–1,01 bar)

1. For output options W and M, minimum span are: range 2 – 1.50 psi (0,10 bar), range 3 – 8.00 psi (0,55 bar), range 4 – 40.00 psi (2,75 bar), range 5 for Rosemount 3051T – 2000.00 psi (137,89 bar).
2. Assumes atmospheric pressure of 14.7 psig.

Service

Liquid, gas, and vapor applications.

4–20 mA HART (output code A)

Power supply

External power supply required. Standard transmitter (4–20 mA) operates on 10.5–42.4 Vdc with no load.

Load limitations

Maximum loop resistance is determined by the voltage level of the external power supply described by:

Max. loop resistance = 43.5 (power supply voltage – 10.5)

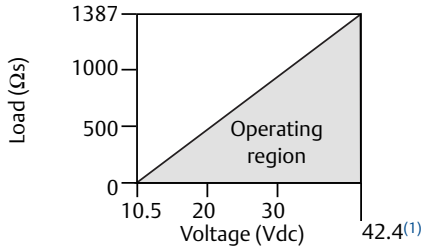

Communication requires a minimum loop resistance of 250 ohms.

1. For CSA approval, power supply must not exceed 42.4 V.

Indication

Optional 2-line LOI/LCD display

Optional configuration buttons

Configuration buttons need to be specified:

- Digital zero trim (option code DZ) changes digital value of the transmitter and is used for performing a sensor zero trim.
- Analog zero span (option code D4) changes analog value and can be used to rerange the transmitter with an applied pressure.

Output

2-wire 4–20mA, user selectable for linear or square root output. Digital process variable superimposed on 4–20 mA signal, available to any host that conforms to HART Protocol. The Rosemount 3051 comes with Selectable HART Revisions. Digital communications based on HART Revision 5 (default) or Revision 7 (option code HR7) can be selected. The HART revision can be switched in the field using any HART based configuration tool or the optional LOI (M4).

Power advisory diagnostics

Power advisory diagnostics pro-actively detect and notify you of degraded electrical loop integrity before it can affect your process operation. Example loop problems that can be detected include water in the terminal compartment, corrosion of terminals, improper grounding, and unstable power supplies. The device dashboard presents the diagnostics in a graphical, task-based interface that provides single-click access to critical process/device information and descriptive graphical troubleshooting.

LOI

The LOI utilizes a 2-button menu with internal and external configuration buttons. Internal buttons are always configured for LOI. External buttons can be configured for either LOI (option code M4), Analog Zero and Span (option code D4) or Digital Zero Trim (option code DZ). See Rosemount 3051 Reference Manual for LOI configuration menu.

FOUNDATION Fieldbus Protocol (output code F)

Power supply

External power supply required; transmitters operate on 9.0 to 32.0 Vdc transmitter terminal voltage. FISCO transmitters operate on 9.0 to 17.5 Vdc.

Current draw

17.5 mA for all configurations (including LCD display option)

Indication

Optional 2-line LCD display

FOUNDATION Fieldbus block execution times

Block	Execution time
Resource	N/A
Sensor and SPM Transducer	N/A
LCD Display	N/A
Analog Input 1, 2	20 milliseconds
PID	25 milliseconds
Input Selector	20 milliseconds
Arithmetic	20 milliseconds
Signal Characterizer	20 milliseconds
Integrator	20 milliseconds
Output Splitter	20 milliseconds
Control Selector	20 milliseconds

FOUNDATION Fieldbus parameters

Links	25 (max.)
Virtual communications relationships (VCR)	20 (max.)

FOUNDATION Fieldbus function blocks (option A01)

Resource block

The resource block contains diagnostic, hardware, and electronics information. There are no linkable inputs or outputs to the resource block.

Sensor transducer block

The sensor transducer block contains sensor information and the ability to calibrate the pressure sensor or recall factory calibration.

LCD transducer block

The LCD display transducer block is used to configure the LCD display meter.

Analog input block

The analog input (AI) function block processes the measurements from the sensor and makes them available to other function blocks. The output value from the AI block is in engineering units and contains a status indicating the quality of the measurement. The AI Block is widely used for scaling functionality.

Input selector block

The input selector (ISEL) function block can be used to select the first good, hot backup, maximum, minimum, or average of as many as eight input values and place it at the output. The block supports signal status propagation.

Integrator block

The integrator (INT) function block integrates one or two variables over time. The block compares the integrated or accumulated value to pre-trip and trip limits and generates discrete output signals when the limits are reached.
The INT function block is used as a totalizer. This block will accept up to two inputs, has six options how to totalize the inputs, and two trip outputs.

Arithmetic block

The arithmetic (ARTH) function block provides the ability to configure a range extension function for a primary input. It can also be used to compute nine different arithmetic functions including flow with partial density compensation, electronic remote seals, hydrostatic tank gaging, ratio control, and others.

Signal characterizer block

The signal characterizer (SGCR) function block characterizes or approximates any function that defines an input/output relationship. The function is defined by configuring as many as 20 X,Y coordinates. The block interpolates an output value for a given input value using the curve defined by the configured coordinates. Two separate analog input signals can be processed simultaneously to give two corresponding separate output values using the same defined curve.

PID block

The PID function block combines all of the necessary logic to perform proportional/integral/derivative (PID) control. The block supports mode control, signal scaling and limiting, feed forward control, override tracking, alarm limit detection, and signal status propagation.

Control selector block

The control selector function block selects one of two or three inputs to be the output. The inputs are normally connected to the outputs of PID or other function blocks. One of the inputs would be considered normal and the other two overrides.

Output splitter block

The output splitter function block provides the capability to drive two control outputs from a single input. It takes the output of one PID or other control block to control two valves or other actuators.

Backup Link Active Scheduler (LAS)

The transmitter can function as a Link Active Scheduler if the current link master device fails or is removed from the segment.

FOUNDATION Fieldbus Diagnostics Suite (option code D01)

The Rosemount 3051C FOUNDATION Fieldbus Diagnostics Suite features SPM technology to detect changes in the process, process equipment, or installation conditions (such as plugged impulse lines) of the transmitter. This is done by modeling the process noise signature (using the statistical values of mean and standard deviation) under normal conditions and then comparing the baseline values to current values over time. If a significant change in the current values is detected, the transmitter can generate an alert.

PROFIBUS PA Protocol (output code W)

Profile version

3.02

Power supply

External power supply required; transmitters operate on 9.0 to 32.0 Vdc transmitter terminal voltage. FISCO transmitters operate on 9.0 to 17.5 Vdc.

Current draw

17.5 mA for all configurations (including LCD display option)

Output update rate

Four times per second

Standard function blocks

Analog input (AI block)

The AI function block processes the measurements and makes them available to the host device. The output value from the AI block is in engineering units and contains a status indicating the quality of the measurement.

Physical block

The physical block defines the physical resources of the device including type of memory, hardware, electronics and diagnostic information.

Transducer block

Contains actual sensor measurement data including the sensor diagnostics and the ability to trim the pressure sensor or recall factory defaults.

Indication

Optional 2-line LCD display

LOI

The LOI utilizes a 2-button menu with external configuration buttons.

Wireless (output code X)

Output

IEC 62591 (*Wireless*HART), 2.4 GHz DSSS

Wireless radio (internal antenna, WP5 option)

- Frequency: 2.400 – 2.485 GHz
- Channels: 15
- Modulation: IEEE 802.15.4 compliant DSSS
- Transmission: Maximum of 10 dBm EIRP

Local display

The optional 3-line, 7-digit LCD display can display user-selectable information such as primary variable in engineering units, scaled variable, percent of range, sensor module temperature, and electronics temperature. The display updates based on the wireless update rate.

Digital zero trim

Digital zero trim (option DZ) is an offset adjustment to compensate for mounting position effects, up to 5% of URL.

Update rate

User selectable 1 sec. to 60 min.

Wireless sensor module for in-line transmitters

The Rosemount 3051 Wireless Transmitter requires the engineered polymer housing to be selected. The standard sensor module will come with aluminum material. If SST is required, the option WSM must be selected.

Power module

Field replaceable, keyed connection eliminates the risk of incorrect installation, Intrinsically Safe Lithium-thionyl chloride Power Module with PBT/PC enclosure. 10-year life at one minute update rate.[1]

1. *Reference conditions are 70 °F (21 °C), and routing data for three additional network devices.*

Note
Continuous exposure to ambient temperature limits of –40 °F or 185 °F (–40 °C or 85 °C) may reduce specified life by less than 20 percent.

Low power output

1–5 Vdc HART low power (output code M)

Output

3-wire 1–5 Vdc (option code C2) user-selectable output. Also user selectable for linear or square root output configuration. Digital process variable superimposed on voltage signal, available to any host conforming to the HART Protocol. Low-power transmitter operates on 6–12 Vdc with no load.

Power consumption

3.0 mA, 18–36 mW

Minimum load impedance

100 kΩ (V_{out} wiring)

Indication

Optional 5-digit LCD display

Overpressure limits

Rosemount 3051CD/CG/CF

- Range 0: 750 psi (51,71 bar)
- Range 1: 2000 psig (137,90 bar)
- Ranges 2–5: 3626 psig (250,00 bar)
  4500 psig (310,26 bar) for option code P9

Rosemount 3051CA

- Range 1: 750 psia (51,71 bar)
- Range 2: 1500 psia (103,42 bar)
- Range 3: 1600 psia (110,32 bar)
- Range 4: 6000 psia (413,69 bar)

Rosemount 3051TG/TA

- Range 1: 750 psi (51,71 bar)
- Range 2: 1500 psi (103,42 bar)
- Range 3: 1600 psi (110,32 bar)
- Range 4: 6000 psi (413,69 bar)
- Range 5: 15000 psi (1034,21 bar)
- Range 6: 24000 psi (1654,74 bar)

For Rosemount 3051L or level flange option codes FA, FB, FC, FD, FP, and FQ, limit is 0 psia to the flange rating or sensor rating, whichever is lower.

Table 9. Rosemount 3051L and Level Flange Rating Limits

Standard	Type	CS rating	SST rating
ANSI/ASME	Class 150	285 psig	275 psig
ANSI/ASME	Class 300	740 psig	720 psig
ANSI/ASME	Class 600	1480 psig	1440 psig
At 100 °F (38 °C), the rating decreases with increasing temperature, per ANSI/ASME B16.5.			
DIN	PN 10–40	40 bar	40 bar
DIN	PN 10/16	16 bar	16 bar
DIN	PN 25/40	40 bar	40 bar
At 248 °F (120 °C), the rating decreases with increasing temperature, per DIN 2401.			

Static pressure limit

Rosemount 3051CD only

Operates within specifications between static line pressures of 0.5 psia and 3626 psig (4500 psig [310, 26 bar] for option code P9).

Range 0: 0.5 psia and 750 psig (0,03 bar and 51,71 bar)

Range 1: 0.5 psia and 2000 psig (0,03 bar and 137, 90 bar)

Burst pressure limits

Rosemount 3051C, 3051CF Coplanar or Traditional process flange

10081 psig (695,06 bar)

Rosemount 3051T In-Line

- Ranges 1–4: 11016 psi (759,53 bar)
- Range 5: 26016 psig (1793,74 bar)
- Range 6: 46092 psi (3177,93 bar)

Failure mode alarm

HART 4–20 mA (output option code A)

If self-diagnostics detect a sensor or microprocessor failure, the analog signal is driven either high or low to alert the user. High or low failure mode is user-selectable with a jumper/switch on the transmitter. The values to which the transmitter drives its output in failure mode depend on whether it is configured to standard, NAMUR-compliant, or custom levels (see alarm configuration below). The values for each are as follows:

	High alarm	Low alarm
Default	≥ 21.75 mA	≤ 3.75 mA
NAMUR compliant[1]	≥ 22.5 mA	≤ 3.6 mA
Custom levels[2]	20.2 – 23.0 mA	3.4 – 3.8 mA

1. Analog output levels are compliant with NAMUR recommendation NE 43, see option codes C4 or C5.
2. Low alarm must be 0.1 mA less than low saturation and high alarm must be 0.1 mA greater than high saturation.

Output code M

If self-diagnostics detect a gross transmitter failure, the analog signal will be driven either below 0.94 V or above 5.4 V to alert the user (below 0.75 V or above 4.4 V for Option C2). High or low alarm signal is user-selectable by internal jumper.

Output code F, W, and X

If self-diagnostics detect a gross transmitter failure, that information gets passed as an alert and a status along with the process variable.

Temperature limits

Ambient[1]

- –40 to 185 °F (–40 to 85 °C)
- With LCD display[2][3]: –40 to 176 °F (–40 to 80 °C)

1. *For BR5 option code ambient temperature limits are –58 to 185 °F (–50 to 85 °C) and for BR6 option code ambient temperature limits are –76 to 185 °F (–60 to 85 °C).*
2. *For the output code M and W, LCD display may not be readable and LCD display updates will be slower at temperatures below –22 °F (–30 °C).*
3. *Wireless LCD display may not be readable and LCD display updates will be slower at temperature below –4 °F (–20 °C).*

Storage[1]

- –76 to 230 °F (–60 to 110 °C)
- With LCD display: –76 to 185 °F (–60 to 85 °C)
- With wireless output: –40 to 185 °F (–40 to 85 °C)

1. *If storage temperature is above 85 °C, perform a sensor trim prior to installation.*

Process

At atmospheric pressures and above. See Table 10.

Table 10. Rosemount 3051 Process Temperature Limits

Rosemount 3051CD, 3051CG, 3051CF, 3051CA	
Silicone fill sensor[1]	
with Coplanar flange	–40 to 250 °F (–40 to 121 °C)[2]
with Traditional flange	–40 to 300 °F (–40 to 149 °C)[2][3]
with Level flange	–40 to 300 °F (–40 to 149 °C)[2]
with 305 Integral Manifold	–40 to 300 °F (–40 to 149 °C)[2]
Inert fill sensor[1][4]	–40 to 185 °F (–40 to 85 °C)[5][6]
Rosemount 3051T (process fill fluid)	
Silicone fill sensor[1]	–40 to 250 °F (–40 to 121 °C)[2]
Inert fill sensor[1]	–22 to 250 °F (–30 to 121 °C)[2]
Rosemount 3051L low-side temperature limits	
Silicone fill sensor[1]	–40 to 250 °F (–40 to 121 °C)[2]
Inert fill sensor[1]	–40 to 185 °F (–40 to 85 °C)[5]
Rosemount 3051L high-side temperature limits (process fill fluid)	
SYLTHERM XLT	–102 to 293 °F (–75 to 145 °C)
D.C. Silicone 704	32 to 401 °F (0 to 205 °C)
D.C. Silicone 200	–49 to 401 °F (–45 to 205 °C)
Inert	–49 to 320 °F (–45 to 160 °C)
Glycerin and water	5 to 203 °F (–15 to 95 °C)
Neobee M-20	5 to 401 °F (–15 to 205 °C)
Propylene glycol and Water	5 to 203 °F (–15 to 95 °C)

1. Process temperatures above 185 °F (85 °C) require derating the ambient limits by a 1.5:1 ratio.
2. 220 °F (104 °C) limit in vacuum service; 130 °F (54 °C) for pressures below 0.5 psia.
3. Rosemount 3051CD0 process temperature limits are –40 to 212 °F (–40 to 100 °C).
4. Inert fill with traditional flange on Range 0: limits are 32 to 185 °F (0 to 85 °C).
5. 160 °F (71 °C) limit in vacuum service.
6. Not available for Rosemount 3051CA.

Humidity limits

0–100% relative humidity

Turn-on time

Performance within specifications less than 2.0 seconds (20.0 seconds for PROFIBUS PA and FOUNDATION Fieldbus Protocols) after power is applied to the transmitter.[1]

1. *Does not apply to wireless option code X.*

Volumetric displacement

Less than 0.005-in^3 (0,08 cm^3)

Damping

4–20 mA HART Protocol

Analog output response to a step input change is user-enterable from 0.0 to 60 seconds for one time constant. This software damping is in addition to sensor module response time.

FOUNDATION Fieldbus Protocol

- Transducer block: User configurable
- AI Block: User configurable

PROFIBUS PA Protocol

AI block only: User configurable

Physical specifications

Material selection

Emerson provides a variety of Rosemount products with various product options and configurations including materials of construction that can be expected to perform well in a wide range of applications. The Rosemount product information presented is intended as a guide for the purchaser to make an appropriate selection for the application. It is the purchaser's sole responsibility to make a careful analysis of all process parameters (such as all chemical components, temperature, pressure, flow rate, abrasives, contaminants, etc.), when specifying product materials, options, and components for the particular application. Emerson is not in a position to evaluate or guarantee the compatibility of the process fluid or other process parameters with the product options, configuration, or materials of construction selected.

Electrical connections

1/2–14 NPT, G1/2, and M20 x 1.5 conduit. The polymer housing code P) has no conduit entries. HART interface connections fixed to terminal block for output code A and to 701P Power Module for output code X.

Process connections

Rosemount 3051C

- 1/4–18 NPT on 2 1/8-in. centers
- 1/2–14 NPT on 2-, 2 1/8-, or 2 1/4-in. centers

Rosemount 3051L

- High pressure side: 2-, 3-, or 4-in., ASME B 16.5 (ANSI) Class 150, 300, or 600 flange; 50, 80, or 100 mm, PN 40 or 10/16 flange
- Low pressure side: 1/4–18 NPT on flange 1/2–14 NPT on adapter

Rosemount 3051T

- 1/2–14 NPT female
- G1/2A DIN 16288 Male (range 1–4 only)
- Autoclave type F-250-C (pressure relieved 9/16–18 gland thread; 1/4 OD high pressure tube 60° cone; available for range 5–6 transmitters only).

Rosemount 3051CF

- For Rosemount 3051CFA, see Rosemount 485 Annubar Product Data Sheet.
- For Rosemount 3051CFC, see Rosemount 405 Compact Orifice Plate Product Data Sheet.
- For Rosemount 3051CFP, see Rosemount 1195 Integral Orifice Product Data Sheet.

Process-wetted parts

Drain/vent valves

316 SST, alloy C-276, or alloy 400 material (Alloy 400 not available with Rosemount 3051L)

Process flanges and adapters

- Plated CS
- SST: CF-8M (Cast 316 SST) per ASTM A743
- Cast C-276: CW-12MW per ASTM A494
- Cast Alloy 400: M-30C per ASTM A494

Wetted O-rings

Glass-filled PTFE or graphite-filled PTFE

Process isolating diaphragms

Isolating diaphragm material	Model		
	3051CD 3051CG	3051T	3051CA
316L SST (UNS S31603)	•	•	•
Alloy C-276 (UNS N10276)	•	•	•
Alloy 400 (UNS N04400)	•	N/A	•
Tantalum (UNS R05440)	•	N/A	N/A
Gold-plated Alloy 400	•	N/A	•
Gold-plated 316L SST	•	•	•

Rosemount 3051L process wetted parts

Flanged process connection (transmitter high side)

Process diaphragms, including process gasket surface

316L SST, Alloy C-276, or Tantalum

Extension

CF-3M (Cast version of 316L SST, material per ASTM-A743), or Alloy C-276. Fits schedule 40 and 80 pipe.

Mounting flange

Zinc-cobalt plated CS or SST

Reference process connection (transmitter low side)

Isolating diaphragms

316L SST or Alloy C-276

Reference flange and adapter

CF-8M (cast version of 316 SST, material per ASTM-A743)

Non-wetted parts

Electronics housing

Low-copper aluminum or CF-8M (cast version of 316 SST)
Enclosure type 4X, IP 65, IP 66, IP 68
Housing material code P: PBT/PC with NEMA® 4X and IP66/67/68

Coplanar sensor module housing

SST: CF-3M (Cast 316L SST)

Bolts

- Plated CS per ASTM A449, Type 1
- Austenitic 316 SST per ASTM F593
- ASTM A193, Grade B7M alloy steel
- Alloy K-500

Sensor module fill fluid

- Coplanar: Silicone or Inert Halocarbon
  In-line: Silicone or Fluorinert™ FC-43

Process fill fluid (Rosemount 3051L only)

SYLTHERM XLT, D.C. Silicone 704, D.C. Silicone 200, inert, glycerin and water, Neobee M-20, or propylene glycol and water

Paint

Polyurethane

Cover O-rings

- Buna-N
- Silicone (for wireless option code X)

Power module

Field replaceable, keyed connection eliminates the risk of incorrect installation, Intrinsically Safe Lithium-thionyl chloride Power Module with PBT enclosure.

Shipping weights

Table 11. Transmitter Weights without Options[1]

Transmitter	3051 In lb. (kg)	Wireless In lb. (kg)
3051C	6.0 (2,7)	3.9 (1,8)
3051T	3.0 (1,4)	1.9 (0,86)
3051L	Table 12	Table 12

1. Transmitter weights include the sensor module and housing only (aluminum for Rosemount 3051 and polymer for wireless).

Table 12. Rosemount 3051L Weights without Options

Flange	Flush lb. (kg)	2-in. Ext. lb. (kg)	4-in. Ext. lb. (kg)	6-in. Ext. lb. (kg)
2-in., Class 150	12.5 (5,7)	N/A	N/A	N/A
3-in., Class 150	17.5 (7,9)	19.5 (8,8)	20.5 (9,3)	21.5 (9,7)
4-in., Class 150	23.5 (10,7)	26.5 (12,0)	28.5 (12,9)	30.5 (13,8)
2-in., Class 300	17.5 (7,9)	N/A	N/A	N/A
3-in., Class 300	22.5 (10,2)	24.5 (11,1)	25.5 (11,6)	26.5 (12,0)
4-in., Class 300	32.5 (14,7)	35.5 (16,1)	37.5 (17,0)	39.5 (17,9)
2-in., Class 600	15.3 (6,9)	N/A	N/A	N/A
3-in., Class 600	25.2 (11,4)	27.2 (12,3)	28.2 (12,8)	29.2 (13,2)
DN 50/ PN 40	13.8 (6,2)	N/A	N/A	N/A
DN 80/ PN 40	19.5 (8,8)	21.5 (9,7)	22.5 (10,2)	23.5 (10,6)
DN 100/ PN 10/16	17.8 (8,1)	19.8 (9,0)	20.8 (9,5)	21.8 (9,9)
DN 100/ PN 40	23.2 (10,5)	25.2 (11,5)	26.2 (11,9)	27.2 (12,3)

Table 13. Transmitter Option Weights

Code	Option	Add lb. (kg)
J, K, L, M	SST housing (T)	3.9 (1,8)
J, K, L, M	SST housing (C, L, H, P)	3.1 (1,4)
M4/M5	LCD display for wired transmitter	0.5 (0,2)
M5	LCD display for wireless output	0.1 (0,04)
B4	SST mounting bracket for coplanar flange	1.0 (0,5)
B1, B2, B3	Mounting bracket for traditional flange	2.3 (1,0)
B7, B8, B9	Mounting bracket for traditional flange	2.3 (1,0)
BA, BC	SST bracket for traditional flange	2.3 (1,0)
H2	Traditional flange	2.4 (1,1)
H3	Traditional flange	2.7 (1,2)
H4	Traditional flange	2.6 (1,2)
H7	Traditional flange	2.5 (1,1)
FC	Level flange—3-in., Class 150	10.8 (4,9)
FD	Level flange—3-in., Class 300	14.3 (6,5)
FA	Level flange—2-in., Class 150	10.7 (4,8)
FB	Level flange—2-in., Class 300	14.0 (6,3)
FP	DIN level flange, SST, DN 50, PN 40	8.3 (3,8)
FQ	DIN level flange, SST, DN 80, PN 40	13.7 (6,2)
WSM	SST sensor module	1.0 (0,45)
	Power Module (701PGNKF)	0.4 (0,18)

Product certifications

Rosemount 3051

Rev 1.13

European Directive Information

A copy of the EU Declaration of Conformity can be found at the end of the Quick Start Guide. The most recent revision of the EU Declaration of Conformity can be found at Emerson.com/Rosemount.

Ordinary Location Certification

As standard, the transmitter has been examined and tested to determine that the design meets the basic electrical, mechanical, and fire protection requirements by a nationally recognized test laboratory (NRTL) as accredited by the Federal Occupational Safety and Health Administration (OSHA).

North America

E5 USA Explosionproof (XP) and Dust-Ignitionproof (DIP)

Range 1–5

Certificate:FM16US0121

Standards: FM Class 3600 - 2011, FM Class 3615 - 2006, FM Class 3810 - 2005, ANSI/NEMA 250 - 2003

Markings: XP CL I, DIV 1, GP B, C, D; DIP CL II, DIV 1, GP E, F, G; CL III; T5(–50 °C ≤ T_a ≤ +85 °C); Factory Sealed; Type 4X

Range 6

Certificate: 1053834

Standards: ANSI/ISA 12.27.01-2003, CSA Std. C22.2 No. 30 -M1986, CSA Std. C22.2 No.142-M1987, CSA Std. C22.2 No. 213 - M1987

Markings: XP Class I, Division 1, Groups B, C and D, T5, (–50 °C ≤ T_a ≤ +85 °C) Suitable for Class I, Zone 1, Group IIB+H2, T5; DIP Class II and Class III, Division 1, Groups E, F and G, T5, (–50 °C ≤ T_a ≤ +85 °C);Type 4X; Factory Sealed; Single Seal (See drawing 03031-1053)

I5 FM Intrinsic Safety (IS) and Nonincendive (NI)

Range 1–5

Certificate:FM16US0120X

Standards: FM Class 3600 - 2011, FM Class 3610 - 2010, FM Class 3611 - 2004, FM Class 3810 - 2005, ANSI/NEMA 250 - 2008

Markings: IS CL I, DIV 1, GP A, B, C, D; CL II, DIV 1, GP E, F, G; Class III; DIV 1 when connected per Rosemount drawing 03031-1019; NI CL 1, DIV 2, GP A, B, C, D;
T4(–50 °C ≤ T_a ≤ +70 °C) [HART],
T5(–50 °C ≤ T_a ≤ +40 °C) [HART];
T4(–50 °C ≤ T_a ≤ +60 °C) [Fieldbus/PROFIBUS];
Type 4x

Special Conditions for Safe Use (X):

1. The Rosemount 3051 Transmitter housing contains aluminum and is considered a potential risk of ignition by impact or friction. Care must be taken into account during installation and use to prevent impact and friction.
2. The Rosemount 3051 Transmitter with the transient terminal block (option code T1) will not pass the 500 Vrms dielectric strength test and this must be taken into account during installation.

Range 6

Certificate: 1053834

Standards: ANSI/ISA 12.27.01-2003, CSA Std. C22.2 No.142-M1987, CSA Std. C22.2. No.157-92

Markings: IS Class I, II, III, Division 1 Groups A, B, C, D, E, F, and G when connected in accordance with Rosemount drawing 03031-1024, Suitable for Class I, Zone 0 Group IIC; Class I, Division 2, Groups A, B, C and D; NIFW; Suitable for Class I Zone 2, Group IIC;
HART: T4 (–60 °C ≤ T_a ≤ 70 °C);
T5 (–60 °C ≤ T_a ≤ 40 °C)
Fieldbus/PROFIBUS: T4 (–60 °C ≤ T_a ≤ 60 °C)
Type 4X; Factory Sealed; Single Seal (See drawing 03031-1053)

IE USA FISCO

Range 1–5

Certificate:FM16US0120X

Standards: FM Class 3600 - 2011, FM Class 3610 - 2010, FM Class 3611 - 2004, FM Class 3810 - 2005

Markings: IS CL I, DIV 1, GP A, B, C, D when connected per Rosemount drawing 03031-1019 (–50 °C ≤ T_a ≤ +60 °C); Type 4x

Special Conditions for Safe Use (X):

1. The Rosemount 3051 Transmitter housing contains aluminum and is considered a potential risk of ignition by impact or friction. Care must be taken into account during installation and use to prevent impact and friction.
2. The Rosemount 3051 Transmitter with the transient terminal block (option code T1) will not pass the 500 Vrms dielectric strength test and this must be taken into account during installation.

Range 6

Certificate: 1053834

Standards: ANSI/ISA 12.27.01-2003, CSA Std. C22.2 No.142-M1987, CSA Std. C22.2. No.157-92

Markings: IS Class I, Division 1 Groups A, B, C, D, T4 (–60 °C ≤ T_a ≤ +60 °C) when connected in accordance with Rosemount drawing 03031-1024, Suitable for Class I, Zone 0 Group IIC; Type 4X; Factory Sealed; Single Seal (See drawing 03031-1053)

C6 Canada Explosionproof, Dust-Ignitionproof, Intrinsic Safety and Nonincendive

Certificate: 1053834

Standards: ANSI/ISA 12.27.01-2003,
CSA Std. C22.2 No. 30 -M1986,
CSA Std. C22.2 No.142-M1987,
CSA Std. C22.2. No.157-92,
CSA Std. C22.2 No. 213 - M1987

Markings: Explosionproof for Class I, Division 1, Groups B, C and D; Suitable for Class I, Zone 1, Group IIB+H2, T5 (–50 °C ≤ T_a ≤ 85 °C); Dust-Ignitionproof Class II, III, Division 1, Groups E, F, G, T5 (–50 °C ≤ T_a ≤ 85 °C); Class III Division 1; Intrinsically Safe Class I, Division 1 Groups A, B, C, D when connected in accordance with Rosemount drawing 03031-1024, Temperature Code T4; Suitable for Class I, Zone 0; Class I Division 2 Groups A, B, C and D, T5 (–50 °C ≤ T_a ≤ 85 °C); Suitable for Class I Zone 2, Group IIC; Type 4X; Factory Sealed; Single Seal (See drawing 03031-1053)

E6 Canada Explosionproof, Dust-Ignitionproof and Division 2

Certificate: 1053834

Standards: ANSI/ISA 12.27.01-2003,
CSA Std. C22.2 No. 30 -M1986,
CSA Std. C22.2 No.142-M1987,
CSA Std. C22.2 No. 213 - M1987

Markings: Explosionproof Class I, Division 1, Groups B, C and D; Suitable for Class I, Zone 1, Group IIB+H2, T5(–50°C ≤ T_a ≤ 85°C); Dust-Ignitionproof for Class II and Class III, Division 1, Groups E, F and G; T5 (–50 °C ≤ T_a ≤ 85 °C); Class I, Division 2, Groups A, B, C and D; T5 (–50 °C ≤ T_a ≤ 85 °C); Suitable for Class I Zone 2, Group IIC; Type 4X; Factory Sealed; Single Seal (See drawing 03031-1053)

Europe

E8 ATEX Flameproof and Dust

Certificate: KEMA00ATEX2013X; Baseefa11ATEX0275X

Standards: EN60079-0:2012 + A11:2013,
EN60079-1:2014, EN60079-26:2015,
EN60079-31:2009

Markings: Ⓔx II 1/2 G Ex db IIC T6...T4 Ga/Gb T6 (–60 °C ≤ T_a ≤+70 °C),
T4/T5(–60 °C ≤ T_a ≤ +80 °C);
II 1 D Ex ta IIIC T95 °C T_{500}105 °C Da (–20 °C ≤ T_a ≤ +85 °C)

Table 14. Process Temperature

Temperature class	Process temperature
T6	–60 to +65 °C
T5	–60 to +80 °C
T4	–60 to +120 °C

Special Conditions for Safe Use (X):

1. This device contains a thin wall diaphragm. Installation, maintenance and use shall take into account the environmental conditions to which the diaphragm will be subjected. The manufacturer's instructions for installation and maintenance shall be followed in detail to assure safety during its expected lifetime.
2. Flameproof joints are not intended for repair.
3. Non-standard paint options may cause risk from electrostatic discharge. Avoid installations that could cause electrostatic build-up on painted surfaces, and only clean the painted surfaces with a damp cloth. If paint is ordered through a special option code, contact the manufacturer for more information.
4. Some variants of the equipment have reduced markings on the nameplate. Refer to the Certificate for full equipment marking.

I1 ATEX Intrinsic Safety and Dust

Certificate: BAS97ATEX1089X; Baseefa11ATEX0275X

Standards: EN60079-0:2012, EN60079-11:2012,
EN60079-31:2009

Markings: HART: Ex II 1 G Ex ia IIC T5/T4 Ga,
T5(–60 °C ≤ T_a ≤ +40 °C),
T4(–60 °C ≤ T_a ≤ +70 °C)
Fieldbus/PROFIBUS: Ex II 1 G Ex ia IIC Ga
T4(–60°C ≤ T_a ≤ +60°C)
DUST: Ex II 1 D Ex ta IIIC T95 °C T_{500}
105 °C Da (–20 °C ≤ T_a ≤ +85 °C)

Table 15. Input Parameters

Parameter	HART	Fieldbus/PROFIBUS
Voltage U_i	30 V	30 V
Current I_i	200 mA	300 mA
Power P_i	0.9 W	1.3 W
Capacitance C_i	0.012 µF	0 µF
Inductance L_i	0 mH	0 mH

Special Conditions for Safe Use (X):

1. The apparatus is not capable of withstanding the 500 V insulation test required by clause 6.3.12 of EN60079-11:2012. This must be taken into account when installing the apparatus.
2. The enclosure may be made of aluminum alloy and given a protective polyurethane paint finish; however care should be taken to protect it from impact or abrasion if located in Zone 0.
3. Some variants of the equipment have reduced markings on the nameplate. Refer to the Certificate for full equipment marking.

IA ATEX FISCO

Certificate:BAS97ATEX1089X

Standards: EN60079-0:2012, EN60079-11:2009

Markings: Ex II 1 G Ex ia IIC T4 Ga (–60 °C $\leq T_a \leq$ +60 °C)

Table 16. Input Parameters

Parameters	FISCO
Voltage U_i	17.5 V
Current I_i	380 mA
Power P_i	5.32 W
Capacitance C_i	<5 nF
Inductance L_i	<10 µH

Special Conditions for Safe Use (X):

1. The apparatus is not capable of withstanding the 500 V insulation test required by clause 6.3.12 of EN60079-11:2012. This must be taken into account when installing the apparatus.
2. The enclosure may be made of aluminum alloy and given a protective polyurethane paint finish; however care should be taken to protect it from impact or abrasion if located in Zone 0.

N1 ATEX Type n and Dust

Certificate:BAS00ATEX3105X; Baseefa11ATEX0275X

Standards: EN60079-0:2012, EN60079-15:2010, EN60079-31:2009

Markings: Ex II 3 G Ex nA IIC T5 Gc (–40 °C $\leq T_a \leq$ +70 °C); Ex II 1 D Ex ta IIIC T95 °C T_{500}105 °C Da (–20 °C $\leq T_a \leq$ +85 °C)

Special Conditions for Safe Use (X):

1. This apparatus is not capable of withstanding the 500 V insulation test that is required by clause 6.8.1 of EN60079-15. This must be taken into account when installing the apparatus.
2. Some variants of the equipment have reduced markings on the nameplate. Refer to the Certificate for full equipment marking.

International

E7 IECEx Flameproof and Dust

Certificate: IECEx KEM 09.0034X; IECEx BAS 10.0034X

Standards: IEC60079-0:2011, IEC60079-1:2014-06, IEC60079-26:2014-10, IEC60079-31:2013

Markings: Ex db IIC T6...T4 Ga/Gb T6(–60 °C $\leq T_a \leq$ +70 °C), T4/T5(–60 °C $\leq T_a \leq$ +80 °C); Ex ta IIIC T95 °C T_{500}105 °C Da (–20 °C $\leq T_a \leq$ +85 °C)

Table 17. Process Temperature

Temperature class	Process temperature
T6	–60 °C to +70 °C
T5	–60 °C to +80 °C
T4	

Special Conditions for Safe Use (X):

1. This device contains a thin wall diaphragm. Installation, maintenance and use shall take into account the environmental conditions to which the diaphragm will be subjected. The manufacturer's instructions for installation and maintenance shall be followed in detail to assure safety during its expected lifetime.
2. Flameproof joints are not intended for repair.
3. Non-standard paint options may cause risk from electrostatic discharge. Avoid installations that could cause electrostatic build-up on painted surfaces, and only clean the painted surfaces with a damp cloth. If paint is ordered through a special option code, contact the manufacturer for more information.
4. Some variants of the equipment have reduced markings on the nameplate. Refer to the Certificate for full equipment marking.

I7 IECEx Intrinsic Safety

Certificate: IECEx BAS 09.0076X

Standards: IEC60079-0:2011, IEC60079-11:2011

Markings: HART: Ex ia IIC T5/T4 Ga, T5(–60 °C $\leq T_a \leq$ +40 °C), T4(–60 °C $\leq T_a \leq$ +70 °C) Fieldbus/PROFIBUS: Ex ia IIC T4(–60 °C $\leq T_a \leq$ +60 °C)

Table 18. Input Parameters

Parameter	HART	Fieldbus/PROFIBUS
Voltage U_i	30 V	30 V
Current I_i	200 mA	300 mA
Power P_i	0.9 W	1.3 W
Capacitance C_i	0.012 µF	0 µF
Inductance L_i	0 mH	0 mH

Special Conditions for Safe Use (X):

1. If the apparatus is fitted with an optional 90V transient suppressor, it is not capable of withstanding the 500 V insulation test required by clause 6.3.12 of IEC60079-11. This must be taken into account when installing the apparatus.

2. The enclosure may be made of aluminum alloy and given a protective polyurethane paint finish; however, care should be taken to protect it from impact or abrasion if located in Zone 0.

IECEx Mining (Special A0259)

Certificate:IECEx TSA 14.0001X

Standards: IEC60079-0:2011, IEC60079-11:2011

Markings: Ex ia I Ma (–60 °C $\leq T_a \leq$ +70 °C)

Parameter	HART	Fieldbus/ PROFIBUS	FISCO
Voltage U_i	30 V	30 V	17.5 V
Current I_i	200 mA	300 mA	380 mA
Power P_i	0.9 W	1.3 W	5.32 W
Capacitance C_i	0.012 µF	0 µF	<5 nF
Inductance L_i	0 mH	0 mH	<10 µH

Special Conditions for Safe Use (X):

1. If the apparatus is fitted with an optional 90V transient suppressor, it is not capable of withstanding the 500 V insulation test required by IEC60079-11. This must be taken into account when installing the apparatus.
2. It is a condition of safe use that the above input parameters shall be taken into account during installation.
3. It is a condition of manufacture that only the apparatus fitted with housing, covers and sensor module housing made out of SST are used in Group I applications.

IG IECEx FISCO

Certificate: IECEx BAS 09.0076X

Standards: IEC60079-0:2011, IEC60079-11:2011

Markings: Ex ia IIC T4 Ga (–40 °C $\leq T_a \leq$ +70 °C)

Table 19. Input Parameters

Parameter	Fieldbus/PROFIBUS
Voltage U_i	17.5 V
Current I_i	380 mA
Power P_i	5.32 W
Capacitance C_i	≤ 5 nF
Inductance L_i	≤ 10 µH

Special Conditions for Safe Use (X):

1. If the apparatus is fitted with an optional 90V transient suppressor, it is not capable of withstanding the 500V insulation test required by clause 6.3.12 of IEC 60079-11. This must be taken into account when installing the apparatus.
2. The enclosure may be made of aluminum alloy and given a protective polyurethane paint finish; however, care should be taken to protect it from impact or abrasion if located in Zone 0.

N7 IECEx Type n

Certificate: IECEx BAS 09.0077X

Standards: IEC60079-0:2011, IEC60079-15:2010

Markings: Ex nA IIC T5 Gc (–40 °C $\leq T_a \leq$ +70 °C)

Special Conditions for Safe Use (X):

1. The apparatus is not capable of withstanding the 500 V insulation test required by IEC60079-15. This must be taken into account when installing the apparatus.

Brazil

E2 INMETRO Flameproof

Certificate: UL-BR 13.0643X

Standards: ABNT NBR IEC60079-0:2008 + Errata 1:2011,
ABNT NBR IEC60079-1:2009 + Errata 1:2011,
ABNT NBR IEC60079-26:2008 + Errata 1:2008

Markings: Ex db IIC T6...T4 Ga/Gb,
T6(–60 °C $\leq T_a \leq$ +70 °C),
T4/T5(–60 °C $\leq T_a \leq$ +80 °C)

Special Conditions for Safe Use (X):

1. This device contains a thin wall diaphragm less than 1 mm thickness that forms a boundary between zone 0 (process connection) and zone 1 (all other parts of the equipment). The model code and datasheet are to be consulted for details of the diaphragm material. Installation, maintenance and use shall take into account the environmental conditions to which the diaphragm will be subjected. The manufacturer's instructions for installation and maintenance shall be followed in detail to assure safety during its expected lifetime.
2. Flameproof joints are not intended for repair.
3. Non-standard paint options may cause risk from electrostatic discharge. Avoid installations that could cause electrostatic build-up on painted surfaces, and only clean the painted surfaces with a damp cloth. If paint is ordered through a special option code, contact the manufacturer for more information.

I2 INMETRO Intrinsic Safety

Certificate: UL-BR 13.0584X

Standards: ABNT NBR IEC60079-0:2008 + Errata 1:2011,
ABNT NBR IEC60079-11:2009

Markings: HART: Ex ia IIC T5/T4 Ga,
T5(–60 °C ≤ T_a ≤ +40 °C),
T4(–60 °C ≤ T_a ≤ +70 °C)
Fieldbus/PROFIBUS: Ex ia IIC T4 Ga
(–60 °C ≤ T_a ≤ +60 °C)

Table 20. Input Parameters

Parameter	HART	Fieldbus/PROFIBUS
Voltage U_i	30 V	30 V
Current I_i	200 mA	300 mA
Power P_i	0.9 W	1.3 W
Capacitance C_i	0.012 µF	0 µF
Inductance L_i	0 mH	0 mH

Special Conditions for Safe Use (X):

1. If the equipment is fitted with an optional 90V transient suppressor, it is not capable of withstanding the 500 V insulation test required by ABNT NBR IRC 60079-11. This must be taken into account when installing the equipment.
2. The enclosure may be made of aluminum alloy and given protective polyurethane paint finish; however, care should be taken to protect it from impact or abrasion if equipment requires EPL Ga.

IB INMETRO FISCO

Certificate: UL-BR 13.0584X

Standards: ABNT NBR IEC60079-0:2008 + Errata 1:2011, ABNT NBR IEC60079-11:2009

Markings: Ex ia IIC T4 Ga (-60 °C ≤ T_a ≤ +60 °C)

Table 21. Input Parameters

Parameters	FISCO
Voltage U_i	17.5 V
Current I_i	380 mA
Power P_i	5.32 W
Capacitance C_i	<5 nF
Inductance L_i	<10 µH

Special Conditions for Safe Use (X):

1. If the equipment is fitted with an optional 90V transient suppressor, it is not capable of withstanding the 500 V insulation test required by ABNT NBR IEC 60079-11. This must be taken into account when installing the equipment.
2. The enclosure may be made of aluminum alloy and given protective polyurethane paint finish; however, care should be taken to protect it from impact or abrasion if equipment requires EPL Ga.

China

E3 China Flameproof

Certificate: GYJ14.1041X; GYJ15.1368X [Flow Meters]

Standards: GB12476-2000; GB3836.1-2010, GB3836.2-2010, GB3836.20-2010

Markings: Ex d IIC T6/T5 Ga/Gb, T6(–50 °C ≤ T_a ≤ +65 °C), T5(–50 °C ≤ T_a ≤ +80 °C)

Special Conditions for Safe Use (X):

1. The relation between ambient temperature arrange and temperature class is as follows:

T_a	Temperature class
–50 °C~ +80 °C	T5
–50 °C~ +65 °C	T6

When used in a combustible dust environment, the maximum ambient temperature is 80 °C.

2. The earth connection facility in the enclosure should be connected reliably.
3. Cable entry certified by notified body with type of protection Ex d IIC in accordance with GB3836.1-2000 and GB3836.2-2000, should be applied when installed in a hazardous location. When used in combustible dust environment, cable entry in accordance with IP66 or higher level should be applied.
4. Obey the warning “Keep tight when the circuit is alive.”
5. End users are not permitted to change any internal components.
6. During installation, use and maintenance of this product, observe the following standards: GB3836.13-1997, GB3836.15-2000, GB3836.16-2006, GB50257-1996, GB12476.2-2006, GB15577-2007.

I3 China Intrinsic Safety

Certificate: GYJ13.1362X; GYJ15.1367X [Flow Meters]

Standards: GB3836.1-2010, GB3836.4-2010, GB3836.20-2010, GB12476.1-2000

Markings: Ex ia IIC Ga T4/T5

Special Conditions for Safe Use (X):

1. Symbol “X” is used to denote specific conditions of use:
   a. If the apparatus is fitted with an optional 90 V transient suppressor, it is not capable of withstanding the 500 V insulation test for one minute. This must be taken into account when installing the apparatus.
   b. The enclosure may be made of aluminum alloy and given a protective polyurethane paint finish; however, care should be taken to protect it from impact or abrasion if located in Zone 0.

2. The relation between T code and ambient temperature range is:

Model	T code	Temperature range
HART	T5	–60 °C ≤ T_a ≤ +40 °C
	T4	–60 °C ≤ T_a ≤ +70 °C
Fieldbus/PROFIBUS/ FISCO		–60 °C ≤ T_a ≤ +60 °C

3. Intrinsically Safe parameters:

Parameter	HART	Fieldbus/ PROFIBUS	FISCO
Voltage U_i	30 V	30 V	17.5 V
Current I_i	200 mA	300 mA	380 mA
Power P_i	0.9 W	1.3 W	5.32 W
Capacitance C_i	0.012 µF	0 µF	<5 nF
Inductance L_i	0 mH	0 mH	<10 µH

Note
FISCO parameters apply to both Group IIC and IIB.

[For Flow Meters] When Rosemount 644 Temperature Transmitter is used, the Rosemount 644 Transmitter should be used with Ex-certified associated apparatus to establish explosion protection system that can be used in explosive gas atmospheres. Wiring and terminals should comply with the instruction manual of both Rosemount 644 Transmitter and associated apparatus. The cables between Rosemount 644 Transmitter and associated apparatus should be shielded cables (the cables must have insulated shield). The shielded cable has to be grounded reliably in a non-hazardous area.

4. Transmitters comply with the requirements for FISCO field devices specified in IEC60079-27:2008. For the connection of an intrinsically safe circuit in accordance with FISCO Model, FISCO parameters are listed in the table above.
5. The product should be used with Ex-certified associated apparatus to establish explosion protection system that can be used in explosive gas atmospheres. Wiring and terminals should comply with the instruction manual of the product and associated apparatus.
6. The cables between this product and associated apparatus should be shielded cables (the cables must have insulated shield). The shielded cable has to be grounded reliably in a non-hazardous area.
7. End users are not permitted to change any intern components but to settle the problem in conjunction with the manufacturer to avoid damage to the product.
8. During installation, use and maintenance of this product, observe the following standards: GB3836.13-1997, GB3836.15-2000, GB3836.16-2006, GB50257-1996, GB12476.2-2006, GB15577-2007.

N3 China Type n
Certificate: GYJ15.1105X
Standards: GB3836.1-2010, GB3836.8-2003
Markings: Ex nA nL IIC T5 Gc (–40 °C ≤ T_a ≤ +70 °C)

Special Condition for Safe Use (X):

1. Symbol "X" is used to denote specific conditions of use: The apparatus is not capable of withstanding the 500 V test to earth for one minute. The must be taken into consideration during installation.

Japan

E4 Japan Flameproof
Certificate: TC20577, TC20578, TC20583, TC20584 [HART]; TC20579, TC20580, TC20581, TC20582 [Fieldbus]
Markings: Ex d IIC T5

Republic of Korea

EP Republic of Korea Flameproof
Certificate:11-KB4BO-0188X [Mfg Singapore]
Markings: Ex d IIC T6...T4

IP Republic of Korea Intrinsic Safety
Certificate:13-KB4BO-0203X [HART – Mfg USA],
13-KB4BO-0204X [Fieldbus – Mfg USA],
10-KB4BO-0138X [HART – Mfg Singapore],
13-KB4BO-0206X [Fieldbus – Mfg Singapore]
Markings: Ex ia IIC T5/T4 (HART)
Ex ia IIC T4 (Fieldbus)

Technical Regulations Customs Union (EAC)

EM EAC Flameproof
Markings: Ga/Gb Ex d IIC T4... T6 X,
T4/T5(–60 °C ≤ T_a≤ +80 °C),
T6(–60 °C ≤ T_a ≤ +70 °C)

Special Condition for Safe Use (X):

1. See certificate for special conditions.

IM EAC Intrinsically Safe

Markings: HART: 0Ex ia IIC T4/T5 Ga X,
T4(–60 °C ≤ T_a ≤ +70 °C),
T5(–60 °C ≤ T_a ≤ +40 °C)
Fieldbus/PROFIBUS: 0Ex ia IIC T4 Ga X
(–60 °C ≤ T_a ≤ +60 °C)

Special Condition for Safe Use (X):

1. See certificate for special conditions.

Combinations

K2 Combination of E2 and I2
K5 Combination of E5 and I5
K6 Combination of C6, E8, and I1
K7 Combination of E7, I7, and N7
K8 Combination of E8, I1, and N1
KB Combination of E5, I5, and C6
KD Combination of E8, I1, E5, I5, and C6
KM Combination of EM and IM
KP Combination of EP and IP

Conduit plugs and adapters

IECEx Flameproof and Increased Safety

Certificate: IECEx FMG 13.0032X

Standards: IEC60079-0:2011, IEC60079-1:2007, IEC60079-7:2006-2007

Markings: Ex de IIC Gb

ATEX Flameproof and Increased Safety

Certificate: FM13ATEX0076X

Standards: EN60079-0:2012, EN60079-1:2007, IEC60079-7:2007

Markings: Ex II 2 G Ex de IIC Gb

Table 22. Conduit Plug Thread Sizes

Thread	Identification mark
M20 x 1.5	M20
1/2 –14 NPT	1/2 NPT

Table 23. Thread Adapter Thread Sizes

Male Thread	Identification mark
M20 x 1.5 – 6H	M20
1/2–14 NPT	1/2 –14 NPT
3/4 –14 NPT	3/4 –14 NPT
Female Thread	**Identification mark**
M20 x 1.5 – 6H	M20
1/2–14 NPT	1/2–14 NPT
G1/2	G1/2

Special Conditions for Safe Use (X):

1. When the thread adapter or blanking plug is used with an enclosure in type of protection increased safety “e” the entry thread shall be suitably sealed in order to maintain the ingress protection rating (IP) of the enclosure.
2. The blanking plug shall not be used with an adapter.
3. Blanking Plug and Threaded Adapter shall be either NPT or Metric thread forms. G1/2 thread forms are only acceptable for existing (legacy) equipment installations.

Additional Certifications

SBS American Bureau of Shipping (ABS) Type Approval

Certificate: 09-HS446883A-5-PDA

Intended Use: Marine & Offshore Applications - Measurement of either gauge or absolute pressure for liquid, gas and vapor.

SBV Bureau Veritas (BV) Type Approval

Certificate: 23155

Requirements: Bureau Veritas Rules for the Classification of Steel Ships

Application: Class notations: AUT-UMS, AUT-CCS, AUT-PORT and AUT-IMS; Pressure transmitter type 3051 cannot be installed on diesel engines

SDN Det Norske Veritas (DNV) Type Approval

Certificate: TAA000004F

Intended Use: DNV GL Rules for Classification - Ships and offshore units

Application:

Location Classes	
Temperature	D
Humidity	B
Vibration	A
EMC	B
Enclosure	D

SLL Lloyds Register (LR) Type Approval

Certificate:11/60002

Application: Environmental categories ENV1, ENV2, ENV3, and ENV5

C5 Custody Transfer - Measurement Canada Accuracy Approval

Certificate: AG-0226; AG-0454; AG-0477

Rosemount 3051 Wireless

Rev 1.4

European Directive Information

A copy of the EU Declaration of Conformity can be found at the end of the Quick Start Guide. The most recent revision of the EU Declaration of Conformity can be found at Emerson.com/Rosemount.

Telecommunication compliance

All wireless devices require certification to ensure that they adhere to regulations regarding the use of the RF spectrum. Nearly every country requires this type of product certification. Emerson is working with governmental agencies around the world to supply fully compliant products and remove the risk of violating country directives or laws governing wireless device usage.

FCC and IC

This device complies with Part 15 of the FCC Rules. Operation is subject to the following conditions: This device may not cause harmful interference. This device must accept any interference received, including interference that may cause undesired operation. This device must be installed to ensure a minimum antenna separation distance of 20 cm from all persons.

Ordinary Location Certification

As standard, the transmitter has been examined and tested to determine that the design meets the basic electrical, mechanical, and fire protection requirements by a nationally recognized test laboratory (NRTL) as accredited by the Federal Occupational Safety and Health Administration (OSHA).

Installing in North America

The US National Electrical Code® (NEC) and the Canadian Electrical Code (CEC) permit the use of Division marked equipment in Zones and Zone marked equipment in Divisions. The markings must be suitable for the area classification, gas, and temperature class. This information is clearly defined in the respective codes.

USA

I5 U.S.A. Intrinsically Safe (IS)
Range 1–5
Certificate: FM 3046325
Standards: FM Class 3600 - 2011, FM Class 3610 - 2010, FM Class 3810 - 2005, ANSI/ISA 60079-0 - 2009, ANSI/ISA 60079-11 - 2009, NEMA® 250 - 2003, ANSI/IEC 60529
Markings: IS CL I, DIV 1, GP A, B, C, D T4; CL 1, Zone 0 AEx ia IIC T4; T4(–40 °C ≤ T_a ≤ +70 °C) when installed per Rosemount drawing 03031-1062; Type 4X/IP66/IP68

Special Conditions for Safe Use (X):

1. The Rosemount 3051 Wireless Pressure Transmitter shall only be used with the 701PGNKF Rosemount SmartPower Battery Pack.
2. The inline pressure sensor may contain more than 10% aluminum and is considered a potential risk of ignition by impact or friction. Care must be taken into account during installation and used to prevent impact and friction.
3. The surface resistivity of the transmitter housing is greater than one gigaohm. To avoid electrostatic charge build-up, it must not be rubbed or cleaned with solvents or a dry cloth.

Range 6
Certificate: CSA 2526009
Standards: FM Class 3600 - 2011, FM Class 3610 - 2010, FM Class 3810 - 2005, ANSI/ISA 60079-0 - 2009, ANSI/ISA 60079-11 - 2009, UL 61010-1 (3rd edition), UL50E (1st Edition)
Markings: IS CL I, DIV 1, GP A, B, C, D T4; CL 1, Zone 0 AEx ia IIC T4; T4(-40 °C ≤ T_a ≤ +70 °C) when installed per Rosemount drawing 03031-1063; Type 4X/IP66/IP68

Canada

I6 Canada Intrinsically Safe
Certificate: CSA 2526009
Standards: CAN/CSA C22.2 No. 0-M91, CAN/CSA C22.2 No.94-M91, CSA Std C22.2 No. 142-M1987, CSA Std C22.2 No. 157-92, CSA Std C22.2 No. 60529:05
Markings: Intrinsically Safe for Class I, Division 1, Groups A, B, C, D, T4 when installed per Rosemount drawing 03031-1063; Type 4X/IP66/IP68

Europe

I1 ATEX Intrinsic Safety
Certificate: Baseefa12ATEX0228X
Standards:EN 60079-0: 2012, EN 60079-11: 2012
Markings: Ex II 1 G Ex ia IIC T4 Ga, T4(–40 °C ≤ T_a ≤ +70 °C) IP66/IP68

Special Conditions for Safe Use (X):

1. The plastic enclosure may constitute a potential electrostatic ignition risk and must not be rubbed or cleaned with a dry cloth.
2. The Model 701PGNKF Power Module may be replaced in a hazardous area. The power module has a surface resistivity greater than 1 GΩ and must be properly installed in the wireless device enclosure. Care must be taken during transportation to and from the point of installation to prevent electrostatic charge build-up.

International

I7 IECEx Intrinsic Safety
Certificate: IECEx BAS 12.0124X
Standards: IEC 60079-0: 2011, IEC 60079-11: 2011
Markings: Ex ia IIC T4 Ga, T4(–40 °C ≤ T_a ≤ +70 °C)
IP66/IP68

Special Conditions for Safe Use (X):

1. The plastic enclosure may constitute a potential electrostatic ignition risk and must not be rubbed or cleaned with a dry cloth.
2. The Model 701PGNKF Power Module may be replaced in a hazardous area. The power module has a surface resistivity greater than 1 GΩ and must be properly installed in the wireless device enclosure. Care must be taken during transportation to and from the point of installation to prevent electrostatic charge build-up.

Brazil

I2 INMETRO Intrinsic Safety
Certificate: UL-BR 13.0534X
Standards: ABNT NBR IEC 60079-0:2008 + Errata 1:2011, ABNT NBR IEC 60079-11:2009
Markings:Ex ia IIC T4 IP66 Ga, T4(–40 °C ≤ T_a ≤ +70 °C)

Special Condition for Safe Use (X):

1. See certificate for special conditions.

China

I3 China Intrinsic Safety
Certificate: GYJ13.1362X, GYJ15.1367X [Flow Meters]
Standards: GB3836.1-2010, GB3836.4-2010, GB3836.20-2010
Markings: Ex ia IIC T4 Ga, T4(–40 ~ +70 °C)

Special Condition for Safe Use (X):

1. See certificate for special conditions.

Japan

I4 TIIS Intrinsic Safety
Certificate: TC22022X (Rosemount 3051C/L), TC22023X (Rosemount 3051T), TC22024X (Rosemount 3051CFx)
Markings: Ex ia IIC T4 Ga, T4(–20 ~ +60 °C)

Special Condition for Safe Use (X):

1. See certificate for special conditions.

EAC - Belarus, Kazakhstan, Russia

IM Technical Regulation Customs Union (EAC) Intrinsic Safety
Certificate: TU RU C-US.AA87.B.00534
Markings: 0Ex ia IIC T4 Ga X; (–40 °C ≤ T_a ≤ +70 °C)

Special Condition for Safe Use (X):

1. See certificate for special conditions.

Korea

IP Korea Intrinsic Safety
Certificate: 13-KB4BO-0295X
Markings: Ex ia IIC T4 (–40 °C ≤ T_a ≤ +70 °C)

Special Condition for Safe Use (X):

1. See certificate for special conditions.

Pipe I.D. range codes

For pipes with an inner diameter (I.D.) range/pipe wall thickness not found in this table or with a line size greater than 12-in. (300 mm), choose option code Z and specify the exact pipe dimensions (I.D. and pipe wall thickness) on the Configuration Data Sheet. The Emerson sizing program will determine this code, based on the application piping.

	Line size			I.D. range	Pipe wall thickness		I.D. range code
	Nominal	Max. O.D.	Option code		ANSI pipes	Non-ANSI pipes	
N/A	2-in. (50 mm)	2.625-in. (66.68 mm)	020	1.784 to 1.841-in. (45.31 to 46.76 mm)	0.065 to 0.545-in. (1.7 to 13.8 mm)	0.065 to 0.488-in. (1.7 to 12.4 mm)	A
				1.842 to 1.938-in. (46.79 to 49.23 mm)		0.065 to 0.449-in. (1.7 to 11.4 mm)	B
				1.939 to 2.067-in. (49.25 to 52.50 mm)		0.065 to 0.417-in. (1.7 to 10.6 mm)	C
				2.068 to 2.206-in. (52.53 to 56.03 mm)		0.065 to 0.407-in. (1.7 to 10.3 mm)	D
	2 1/2-in. (63.5 mm)	3.188-in. (80.98 mm)	025	2.207 to 2.322-in. (56.06 to 58.98 mm)	0.083 to 0.563-in. (2.1 to 14.3 mm)	0.083 to 0.448-in. (2.1 to 11.4 mm)	B
				2.323 to 2.469-in. (59.00 to 62.71 mm)		0.083 to 0.417-in. (2.1 to 10.6 mm)	C
				2.470 to 2.598-in. (62.74 to 65.99 mm)		0.083 to 0.435-in. (2.1 to 11.0 mm)	D
				2.599 to 2.647-in. (66.01 to 67.23 mm)		0.083 to 0.515-in. (2.1 to 13.1 mm)	E
	3-in. (80 mm)	3.75-in. (95.25 mm)	030	2.648 to 2.751-in. (67.26 to 69.88 mm)	0.083 to 0.563-in. (2.1 to 14.3 mm)	0.083 to 0.460-in. (2.1 to 11.7 mm)	A
				2.752 to 2.899-in. (69.90 to 73.63 mm)		0.083 to 0.416-in. (2.1 to 10.6 mm)	B
				2.900 to 3.068-in. (73.66 to 77.93 mm)		0.083 to 0.395-in. (2.1 to 10.0 mm)	C
				3.069 to 3.228-in. (77.95 to 81.99 mm)		0.083 to 0.404-in (2.1 to 10.3 mm)	D
	3 1/2-in. (89 mm)	4.25-in. (107.95 mm)	035	3.229 to 3.333-in. (82.02 to 84.66 mm)	0.120 to 0.600-in. (3.0 to 15.2 mm)	0.120 to 0.496-in. (3.0 to 12.6 mm)	B
				3.334 to 3.548-in. (84.68 to 90.12 mm)		0.120 to 0.386-in. (3.0 to 9.8 mm)	C
				3.549 to 3.734-in. (90.14 to 94.84 mm)		0.120 to 0.415-in. (3.0 to 10.5 mm)	D
	4-in. (100 mm)	5.032-in. (127.81 mm)	040	3.735 to 3.825-in. (94.87 to 97.16 mm)	0.120 to 0.600-in. (3.0 to 15.2 mm)	0.120 to 0.510-in. (3.0 to 13.0 mm)	B
				3.826 to 4.026-in. (97.18 to 102.26 mm)		0.120 to 0.400-in. (3.0 to 10.2 mm)	C
				4.027 to 4.237-in. (102.29 to 107.62 mm)		0.120 to 0.390-in. (3.0 to 9.9 mm)	D
				4.238 to 4.437-in. (107.65 to 112.70 mm)		0.120 to 0.401-in. (3.0 to 10.2 mm)	E
	5-in. (125 mm)	6.094-in. (154.79 mm)	050	4.438 to 4.571-in. (112.73 to 116.10 mm)	0.134 to 0.614-in. (3.4 to 15.6 mm)	0.134 to 0.481-in. (3.4 to 12.2 mm)	A
				4.572 to 4.812-in. (116.13 to 122.22 mm)		0.134 to 0.374-in. (3.4 to 9.5 mm)	B
				4.813 to 5.047-in. (122.25 to 128.19 mm)		0.134 to 0.380-in. (3.4 to 9.7 mm)	C
				5.048 to 5.249-in. (128.22 to 133.32 mm)		0.134 to 0.413-in. (3.4 to 10.5 mm)	D
Sensor size 1	6-in. (150 mm)	6.93-in. (176.02 mm)	060	5.250 to 5.472-in. (133.35 to 138.99 mm)	0.134 to 0.614-in. (3.4 to 15.6 mm)	0.134 to 0.3919-in. (3.4 to 9.9 mm)	A
				5.473 to 5.760-in. (139.01 to 146.30 mm)		0.134 to 0.327-in. (3.4 to 8.3 mm)	B
				5.761 to 6.065-in. (146.33 to 154.05 mm)		0.134 to 0.31-in. (3.4 to 7.9 mm)	C
				6.066 to 6.383-in. (154.08 to 162.13 mm)		0.134 to 0.297-in. (3.4 to 7.5 mm)	D

Sensor size 2	6-in. (150 mm)	6.93-in. (176.02 mm)	060	5.250 to 5.472-in. (133.35 to 139.99 mm)	0.134 to 1.354-in. (3.4 to 34.4 mm)	0.134 to 1.132-in. (3.4 to 28.7 mm)	A
				5.473 to 5.760-in. (139.01 to 146.30 mm)		0.134 to 1.067-in. (3.4 to 27.1 mm)	B
				5.761 to 6.065-in. (146.33 to 154.05 mm)		0.134 to 1.05-in. (3.4 to 26.7 mm)	C
				6.066 to 6.383-in. (154.08 to 162.13 mm)		0.134 to 1.037-in. (3.4 to 26.3 mm)	D
Sensor size 1	7-in. (180 mm)	7.93-in. (201.42 mm)	070	6.384 to 6.624-in. (162.15 to 168.25 mm)	0.134 to 0.614-in. (3.4 to 15.6 mm)	0.134 to 0.374-in. (3.4 to 9.5 mm)	B
				6.625 to 7.023-in. (168.28 to 178.38 mm)		0.134 to 0.216-in. (3.4 to 5.5 mm)	C
				7.024 to 7.392-in. (178.41 to 187.76 mm)		0.134 to 0.246-in. (3.4 to 6.2 mm)	D
Sensor size2	7-in. (180 mm)	7.93-in. (201.42 mm)	070	6.384 to 6.624-in. (162.15 to 168.25 mm)	0.134 to 1.354-in. (3.4 to 34.4 mm)	0.134 to 1.114-in. (3.4 to 28.3 mm)	B
				6.625 to 7.023-in. (168.28 to 178.38 mm)		0.134 to 0.956-in. (3.4 to 24.3 mm)	C
				7.024 to 7.392-in. (178.41 to 187.76 mm)		0.134 to 0.986-in. (3.4 to 25.0 mm)	D
Sensor size 1	8-in. (200 mm)	9.688-in. (246.08 mm)	080	7.393 to 7.624-in. (187.78 to 193.65 mm)	0.250 to 0.73-in. (6.4 to 18.5 mm)	0.250 to 0.499-in. (6.4 to 12.6 mm)	B
				7.625 to 7.981-in. (193.68 to 202.72 mm)		0.250 to 0.374-in. (6.4 to 9.5 mm)	C
				7.982 to 8.400-in. (202.74 to 213.36 mm)		0.250 to 0.312-in. (6.4 to 7.9 mm)	D
				8.401 to 8.766-in. (213.39 to 222.66 mm)		0.250 to 0.364-in. (6.4 to 9.2 mm)	E
Sensor size 2	8-in. (200 mm)	9.688-in. (246.08 mm)	080	7.393 to 7.624-in. (187.78 to 193.65 mm)	0.250 to 1.47-in. (6.4 to 37.3 mm)	0.250 to 1.239-in. (6.4 to 31.4 mm)	B
				7.625 to 7.981-in. (193.68 to 202.72 mm)		0.250 to 1.114-in. (6.4 to 28.3 mm)	C
				7.982 to 8.400-in. (202.74 to 213.36 mm)		0.250 to 1.052-in. (6.4 to 26.7 mm)	D
				8.401 to 8.766-in. (213.39 to 222.66 mm)		0.250 to 1.104-in. (6.4 to 28.0 mm)	E
N/A	10-in. (250 mm)	11.75-in. (298.45 mm)	100	8.767 to 9.172-in. (222.68 to 232.97 mm)	0.250 to 1.470-in. (6.4 to 37.3 mm)	0.250 to 1.065-in. (6.4 to 27.1 mm)	A
				9.173 to 9.561-in. (232.99 to 242.85 mm)		0.250 to 1.082-in. (6.4 to 27.5 mm)	B
				9.562 to 10.020-in. (242.87 to 254.51 mm)		0.250 to 1.012-in. (6.4 to 25.7 mm)	C
				10.021 to 10.546-in. (254.53 to 267.87 mm)		0.250 to 0.945-in. (6.4 to 24.0 mm)	D
				10.547 to 10.999-in. (267.89 to 279.37 mm)		0.250 to 1.018-in. (6.4 to 25.9 mm)	E
	12-in. (300 mm)	13.0375-in. (331.15 mm)	120	11.000 to 11.373-in. (279.40 to 288.87 mm)	0.250 to 1.470-in. (6.4 to 37.3 mm)	0.250 to 1.097-in. (6.4 to 27.9 mm)	B
				11.374 to 11.938-in. (288.90 to 303.23 mm)		0.250 to 0.906-in. (6.4 to 23.0 mm)	C
				11.939 to 12.250-in. (303.25 to 311.15 mm)		0.250 to 1.159-in. (6.4 to 29.4 mm)	D

Dimensional drawings[1]

Figure 1. Rosemount 3051C Exploded View

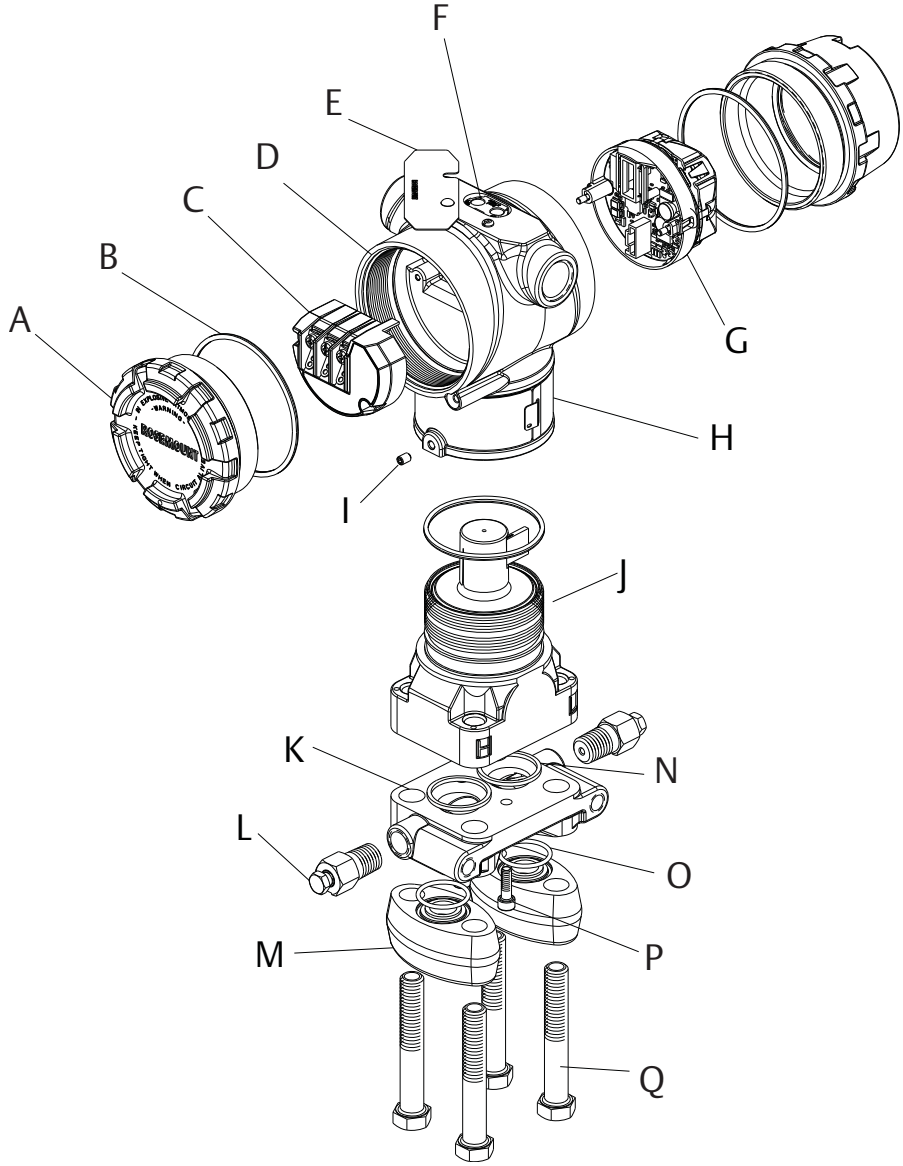

A. Cover	G. Electronics board	L. Drain/vent valve
B. Cover O-ring	H. Name plate	M. Flange adapters
C. Terminal block	I. Housing rotation set screw (180° maximum rotation without further disassembly)	N. Process O-ring
D. Electronics housing	J. Sensor module	O. Flange adapter O-ring
E. Configuration buttons cover	K. Coplanar flange	P. Flange alignment screw (not pressure retaining)
F. Local configuration buttons		Q. Flange bolts

1. *This section contains dimensional drawings for output codes A, F, and X. For output codes W and M, visit Emerson.com/Rosemount/Documentation-and-Drawings.*

Figure 2. Rosemount 3051C Coplanar Flange

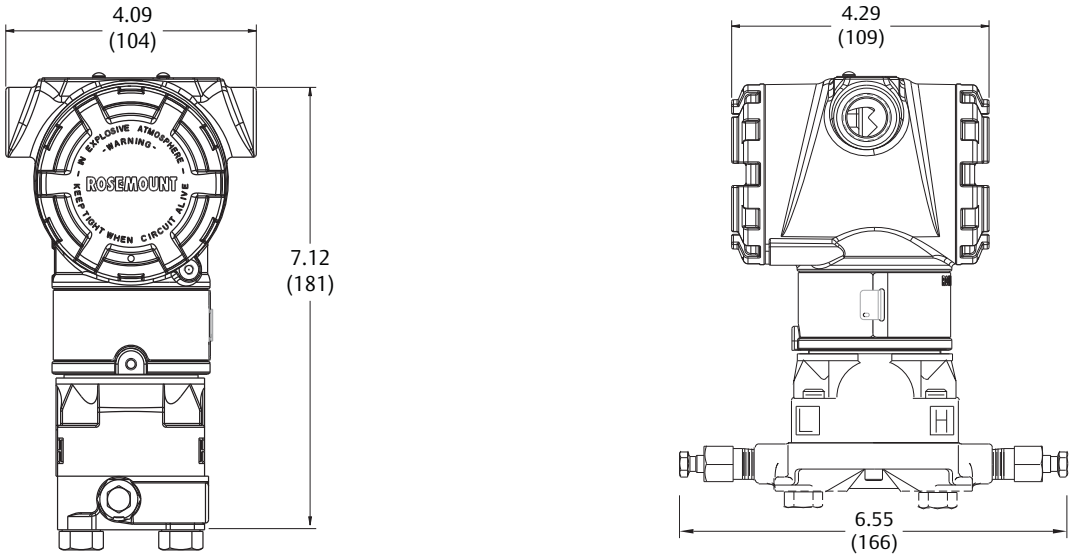

Dimensions are in inches (millimeters).

Figure 3. Rosemount 3051 Wireless Housing with Coplanar Flange

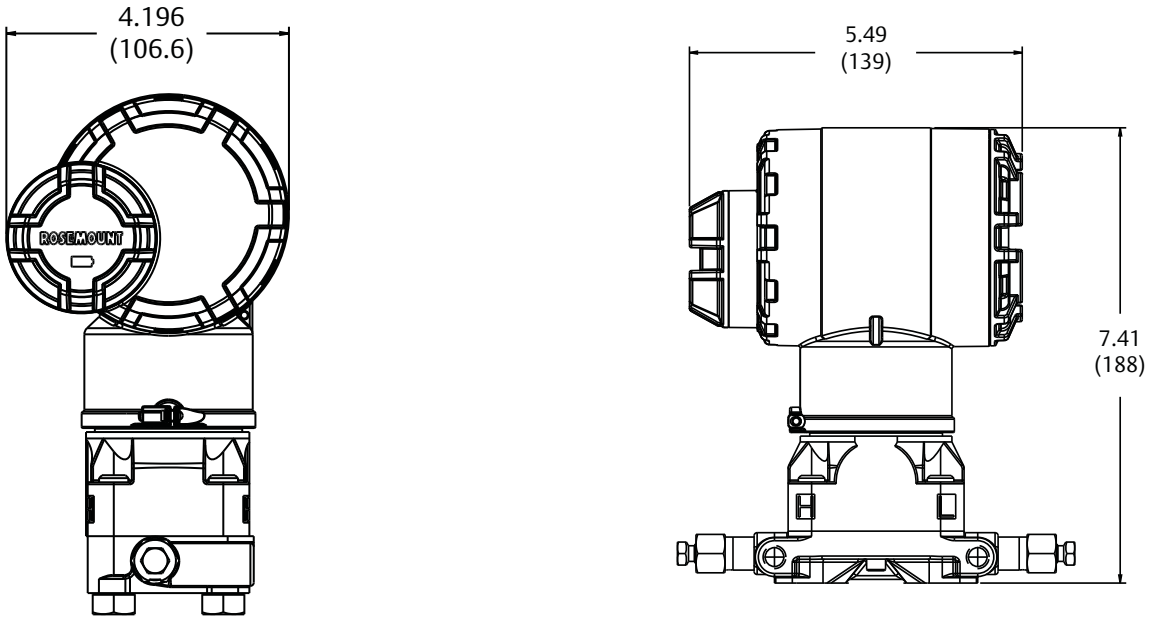

Dimensions are in inches (millimeters).

Figure 4. Rosemount 3051C Coplanar Flange with Rosemount 305RC3 3-Valve Coplanar Integral Manifold

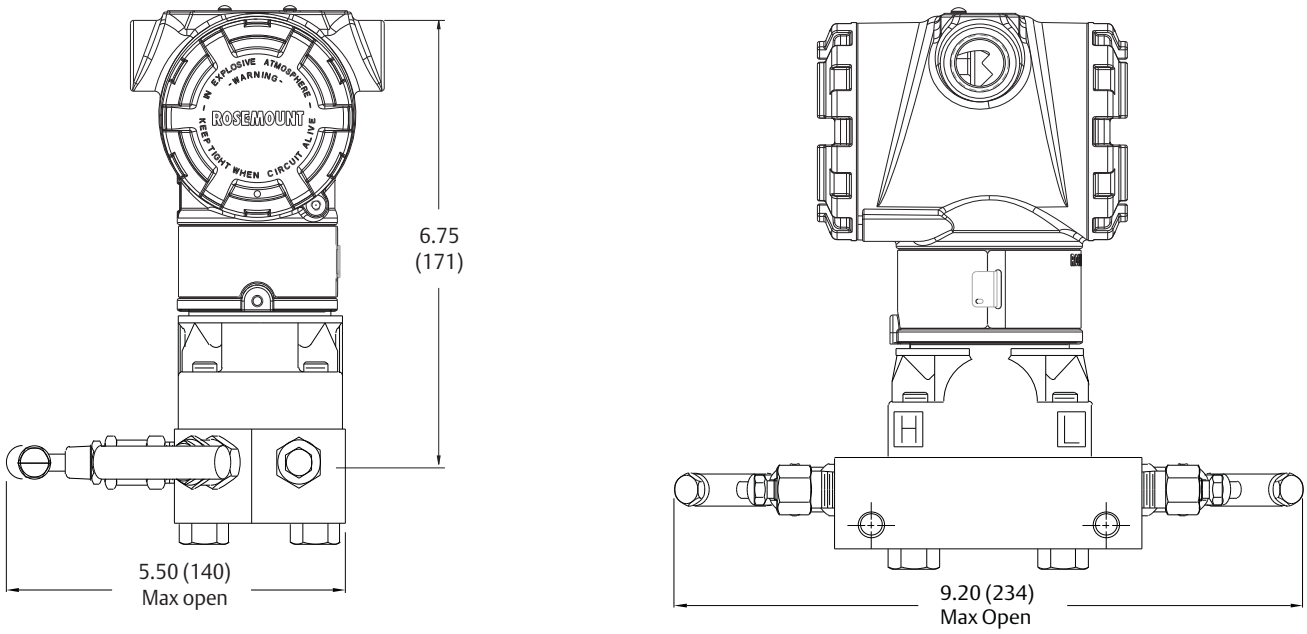

Dimensions are in inches (millimeters).

Figure 5. Coplanar Flange Mounting Configurations with Optional Bracket (B4) for 2-in. Pipe or Panel Mounting

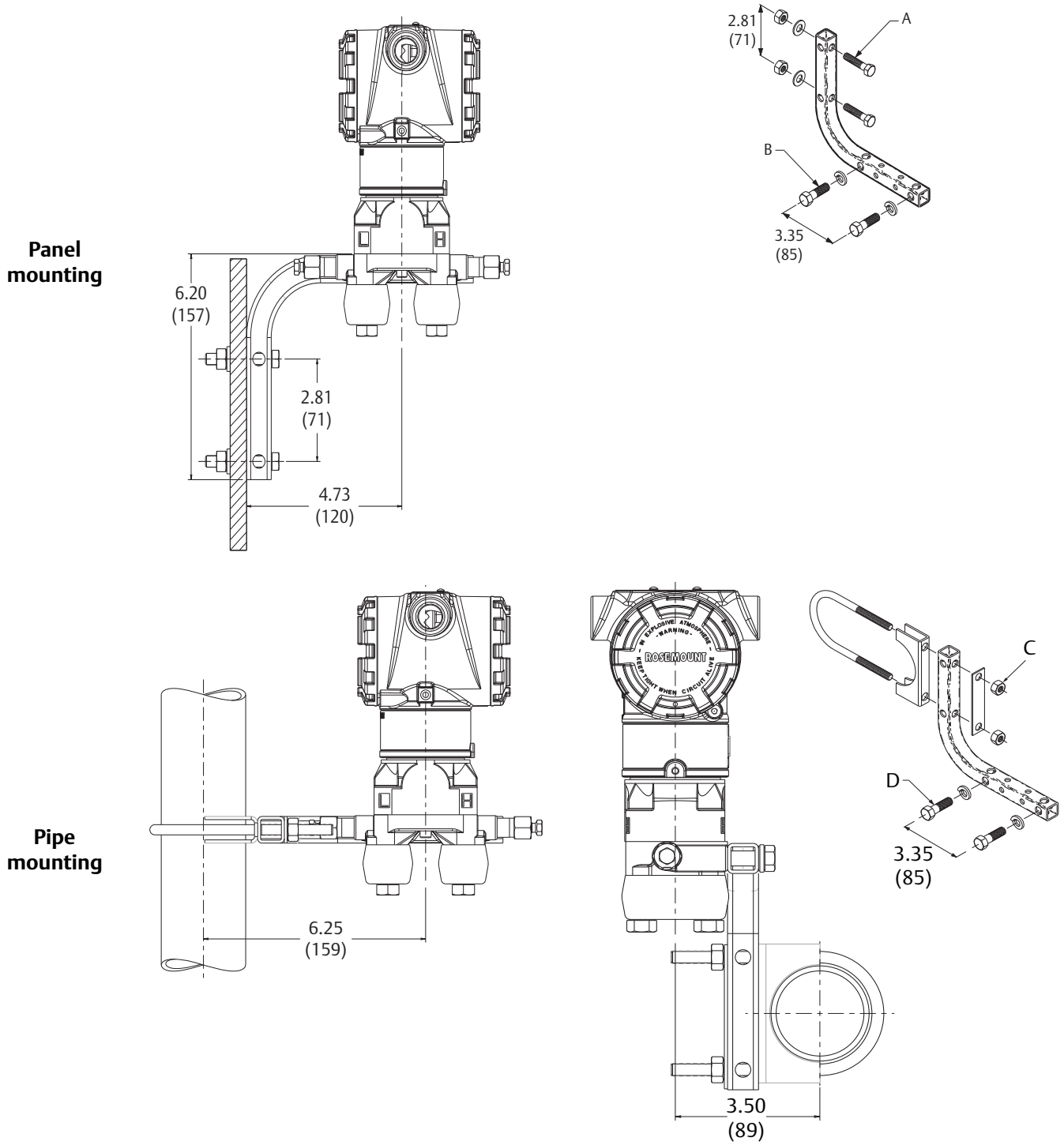

A. 5/16–18 bolts (not supplied)
B. 3/8–16 bolts
Dimensions are in inches (millimeters).

C. 2-in. U-bolt
D. 3/8–16 bolts

Figure 6. Rosemount 3051C Coplanar with Traditional Flange

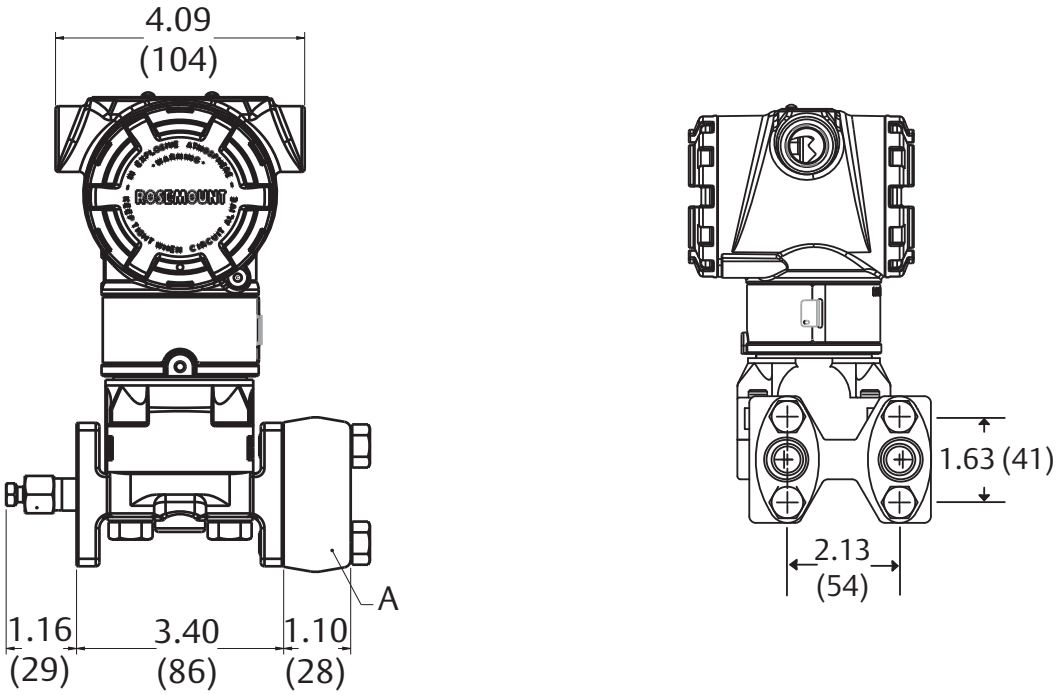

A. Flange adapters (optional)
Dimensions are in inches (millimeters).

Figure 7. Rosemount 3051C Coplanar with Rosemount 305RT3 3-Valve Traditional Integral Manifold

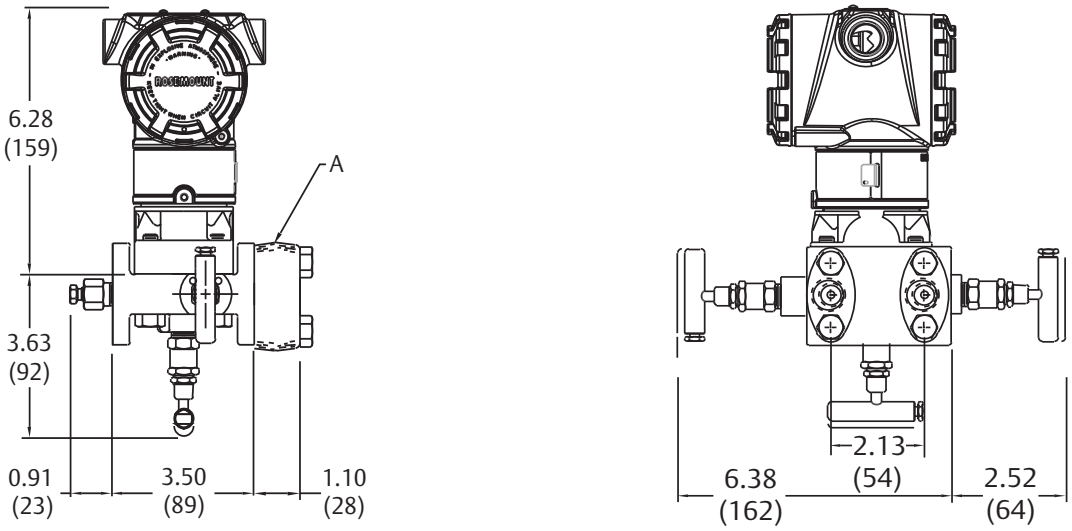

A. 1/2–14 NPT flange adapter (optional)
Dimensions are in inches (millimeters).

Figure 8. Traditional Flange Mounting Configurations with Optional Brackets for 2-in. Pipe or Panel Mounting

Panel mounting bracket (option B2/B8) **Pipe mounting bracket (option B1/B7/BA)**

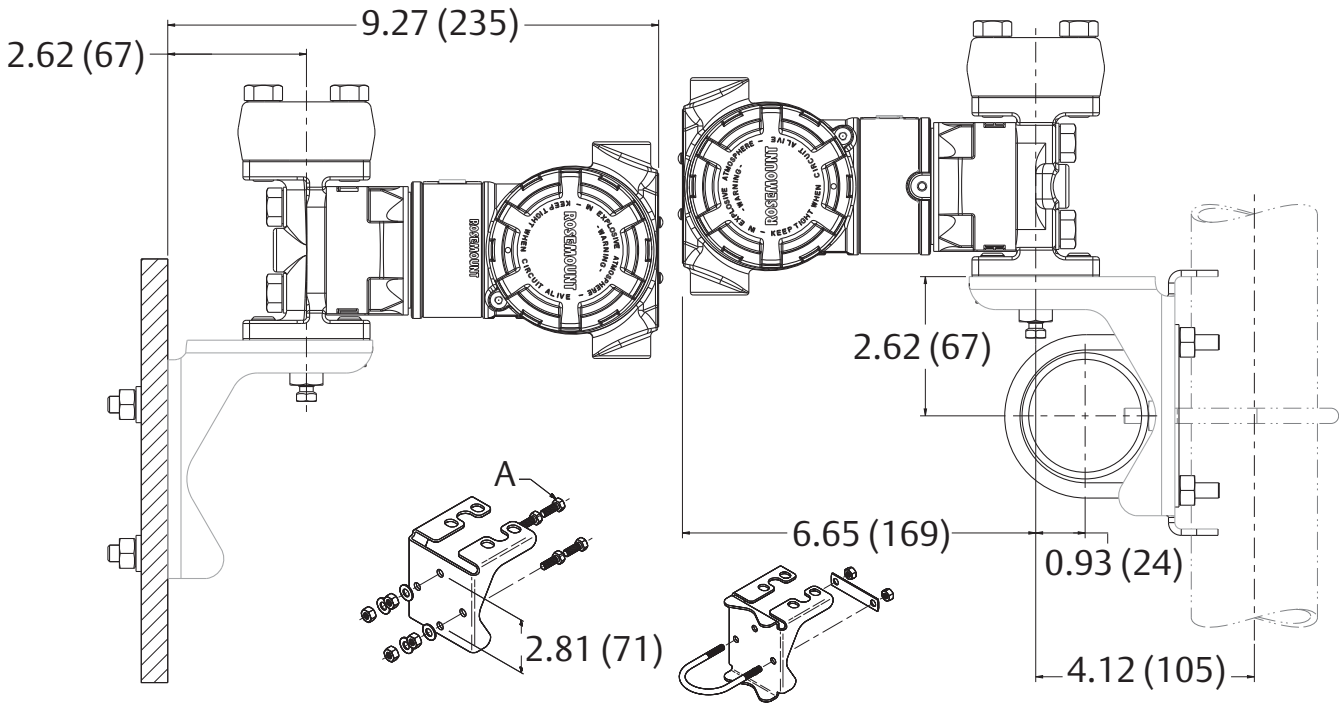

Pipe mounting bracket (option B3/B9/BC)

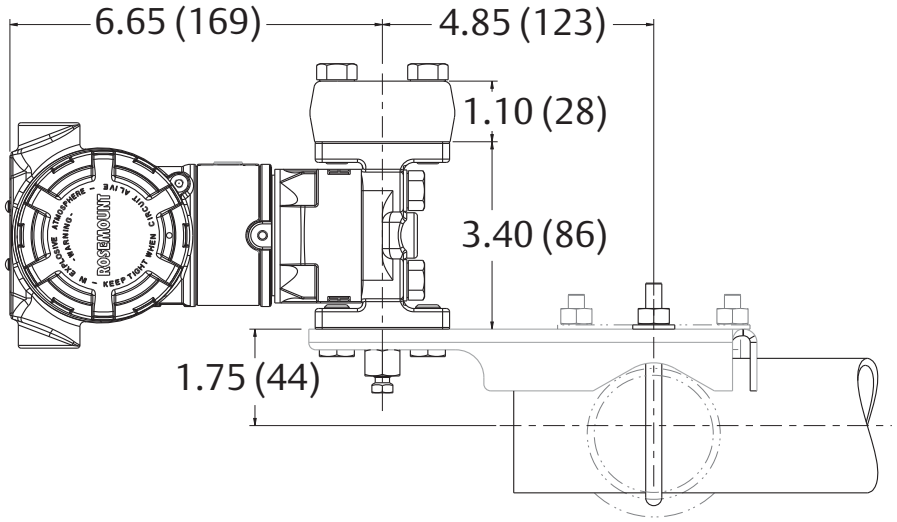

A. 5/16-18 bolts (not supplied)
Dimensions are in inches (millimeters).

Figure 9. Rosemount 3051T

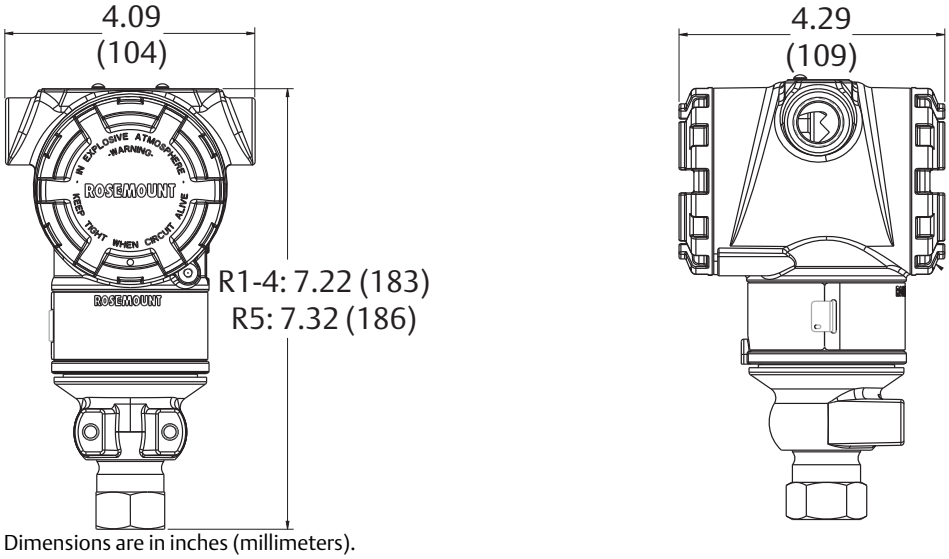

Dimensions are in inches (millimeters).

Figure 10. Rosemount 3051T Wireless Housing

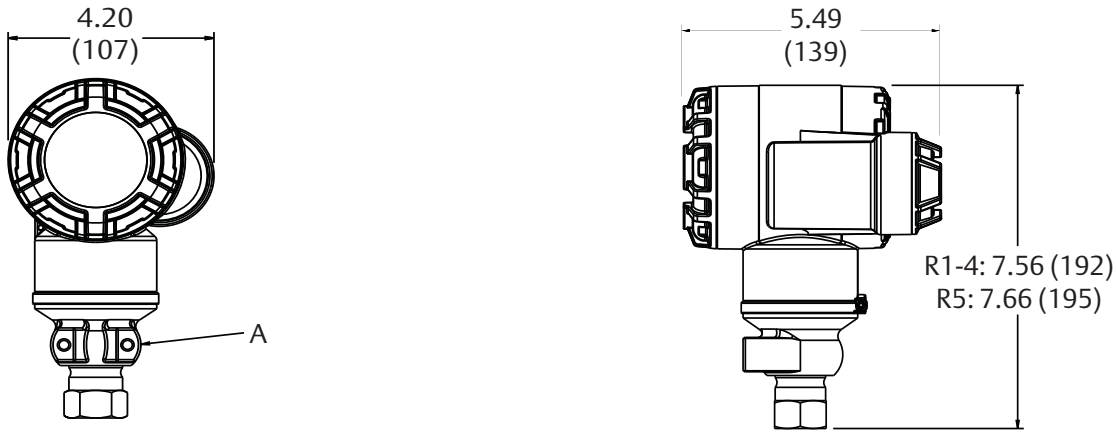

A. U-Bolt bracket
Dimensions are in inches (millimeters).

Figure 11. Rosemount 3051T In-Line Range 6

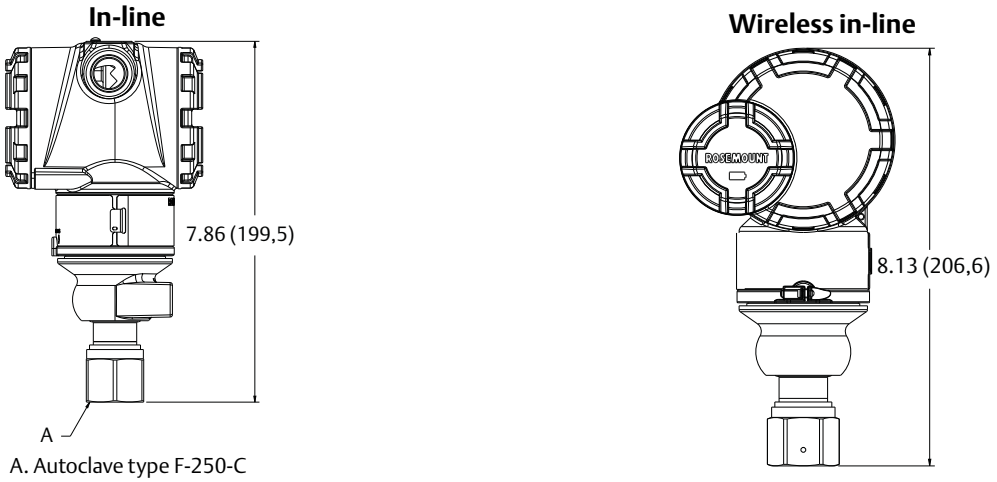

A. Autoclave type F-250-C

Figure 12. Rosemount 3051T with Rosemount 306 2-Valve Integral Manifold

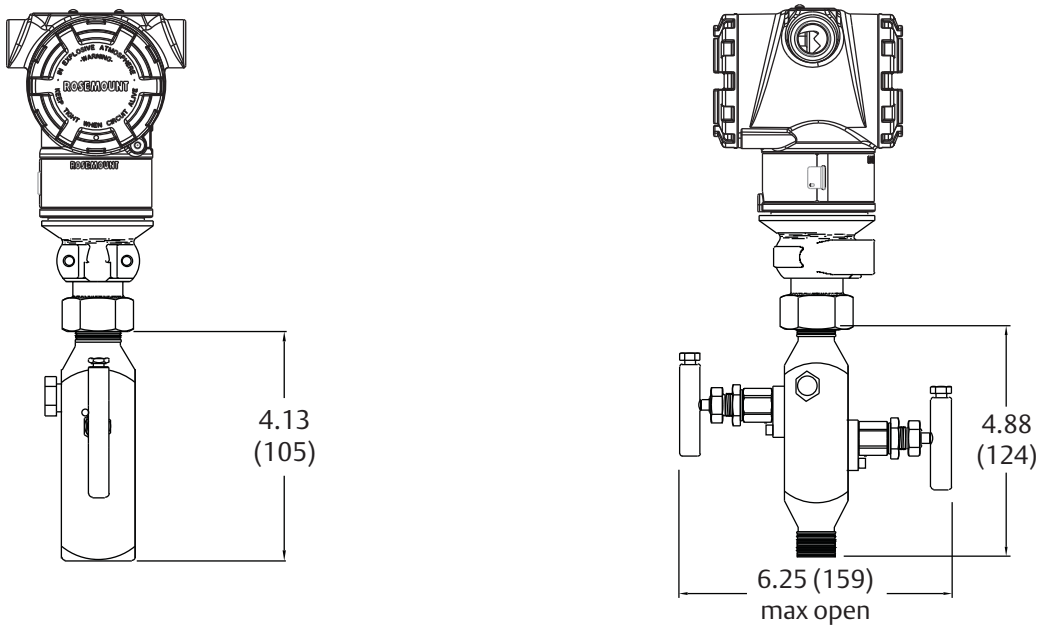

Dimensions are in inches (millimeters).

Figure 13. Rosemount 3051T Typical Mounting Configurations with Optional Mounting Bracket

Pipe mounting **Panel mounting**

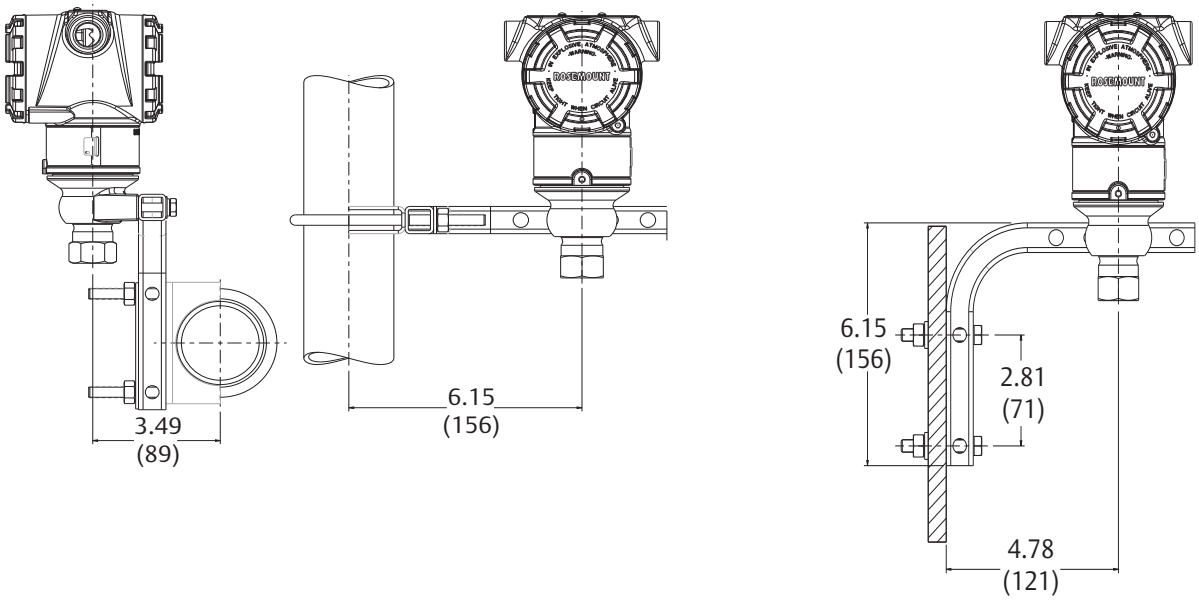

Dimensions are in inches (millimeters).

Figure 14. Rosemount 3051CFA Pak-Lok Annubar Flowmeter[(1)]

Front view **Side view** **Top view**

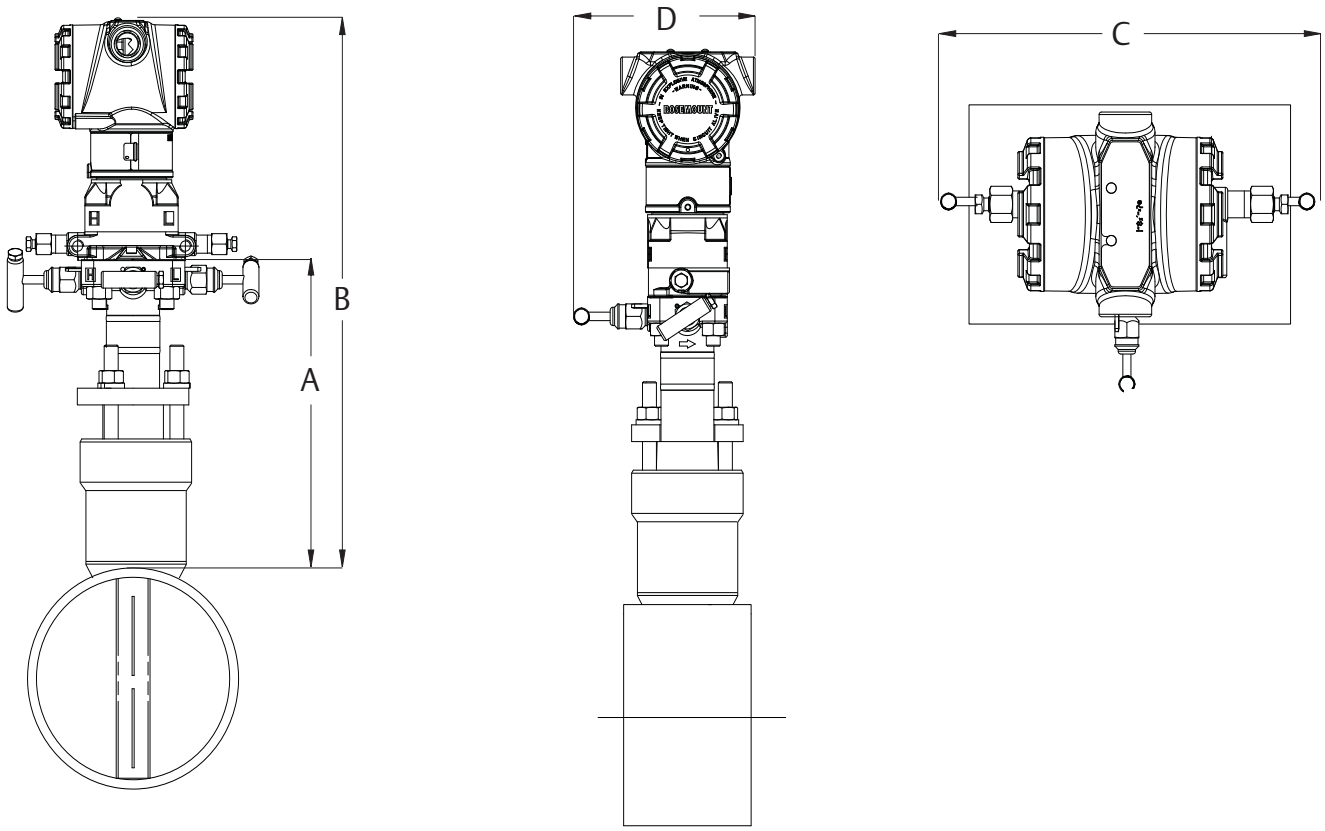

Table 24. Rosemount 3051CFA Pak-Lok Annubar Flowmeter Dimensional Data (Maximum Dimensions)

Sensor size	A	B	C	D
1	8.50 (215.9)	15.60 (396.9)	9.00 (228.6)	6.00 (152.4)
2	11.00 (279.4)	18.10 (460.4)	9.00 (228.6)	6.00 (152.4)
3	12.00 (304.8)	19.10 (485.8)	9.00 (228.6)	6.00 (152.4)

Dimensions are in inches (millimeters).

Figure 15. Rosemount 3051CFC Compact Orifice Flowmeter

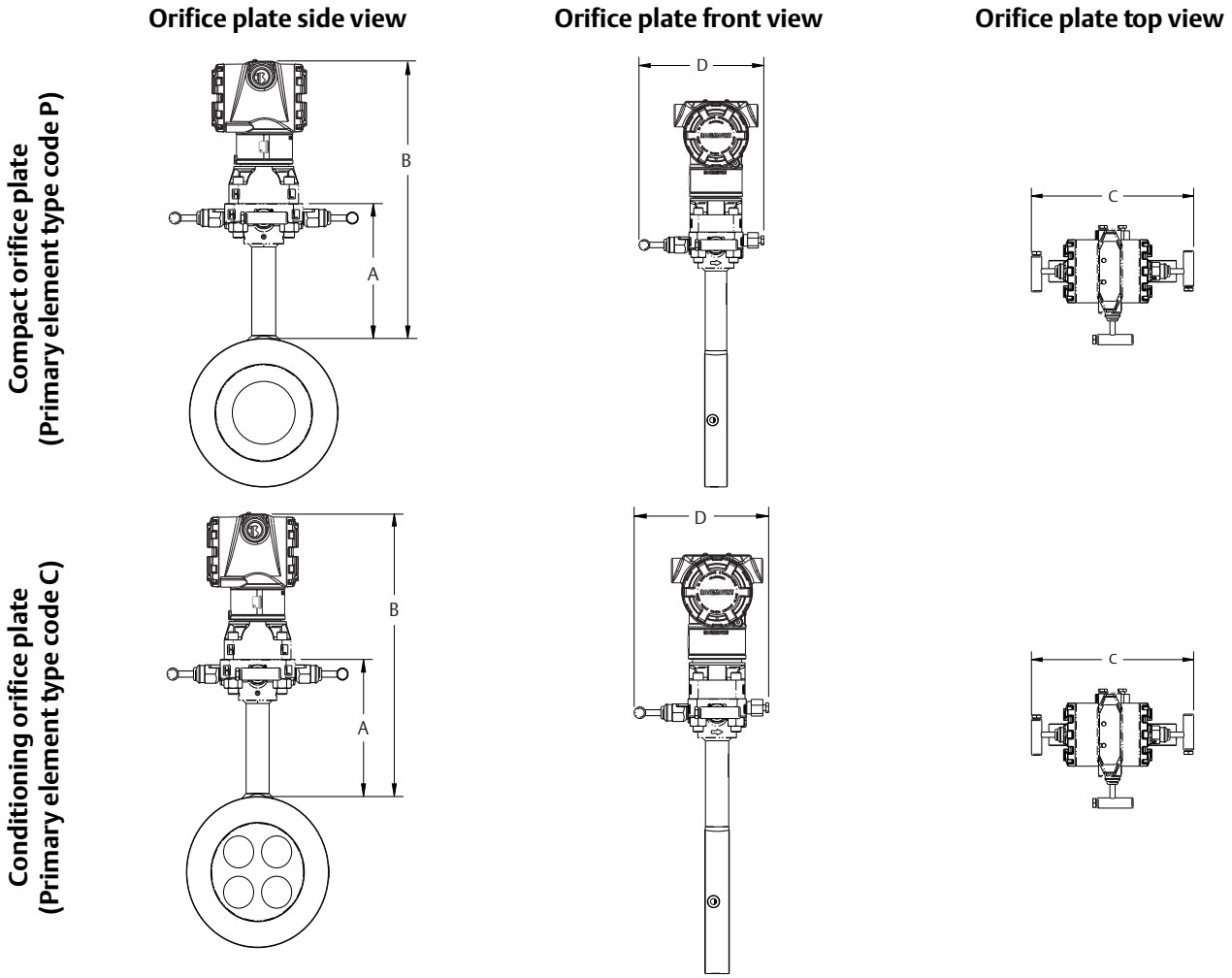

Primary element type	A	B	Transmitter height	C	D
Type P and C	5.62 (143)	Transmitter height + A	6.27 (159)	7.75 (197) - closed 8.25 (210) - open	6.00 (152) - closed 6.25 (159) - open

Dimensions are in inches (millimeters).

1. *The Rosemount Annubar pak-lok model is available up to Class 600 ANSI (1440 psig at 100 °F [99 bar at 38 °C]).*

Figure 16. Rosemount 3051CFP Integral Orifice Flowmeter

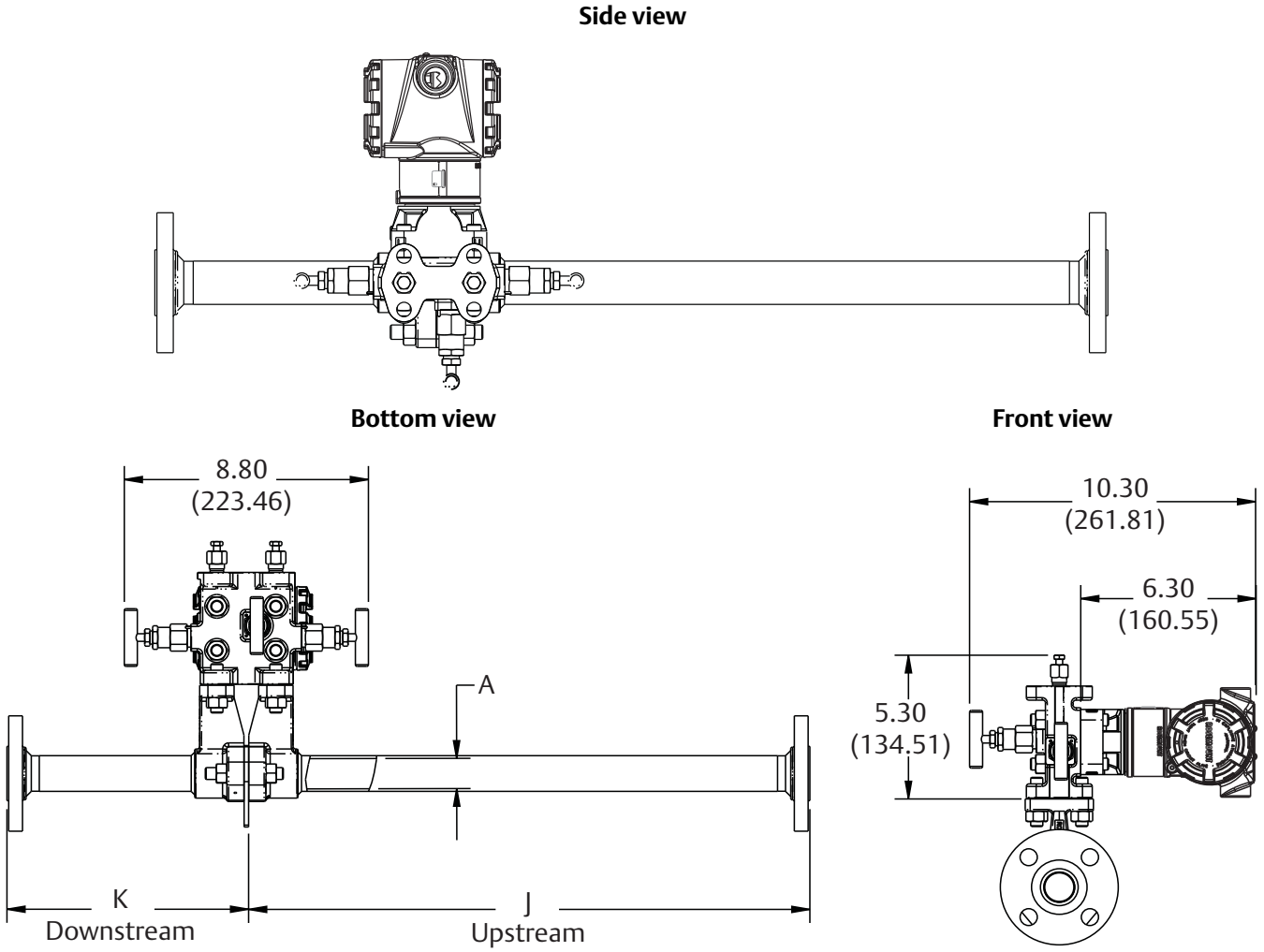

A. B.D. (bore diameter)
Dimensions are in inches (millimeters).

	Line size		
Dimension	**1/2-in. (15 mm)**	**1-in. (25 mm)**	**1 1/2-in. (40 mm)**
J (Beveled/threaded pipe ends)	12.54 (318.4)	20.24 (514.0)	28.44 (722.4)
J (RF slip-on, RTJ slip-on, RF-DIN slip on)	12.62 (320.4)	20.32 (516.0)	28.52 (724.4)
J (RF Class 150, weld neck)	14.37 (364.9)	22.37 (568.1)	30.82 (782.9)
J (RF Class 300, weld neck)	14.56 (369.8)	22.63 (574.7)	31.06 (789.0)
J (RF Class 600, weld neck)	14.81 (376.0)	22.88 (581.0)	31.38 (797.1)
K (Beveled/threaded pipe ends)	5.74 (145.7)	8.75 (222.2)	11.91 (302.6)
K (RF slip-on, RTJ slip-on, RF-DIN slip on)[1]	5.82 (147.8)	8.83 (224.2)	11.99 (304.6)
K (RF Class 150, weld neck)	7.57 (192.3)	10.88 (276.3)	14.29 (363.1)
K (RF Class 300, weld neck)	7.76 (197.1)	11.14 (282.9)	14.53 (369.2)
K (RF Class 600, weld neck)	8.01 (203.4)	11.39 (289.2)	14.85 (377.2)
B.D. (Bore diameter)	0.664 (16.87)	1.097 (27.86)	1.567 (39.80)

Dimensions are in inches (millimeters).

1. Downstream length shown here includes plate thickness of 0.162-in. (4.11 mm).

Figure 17. Rosemount 3051L

2-in. flange configuration (flush mount only)

3- and 4-in. flange configuration

Diaphragm assembly and mounting flange

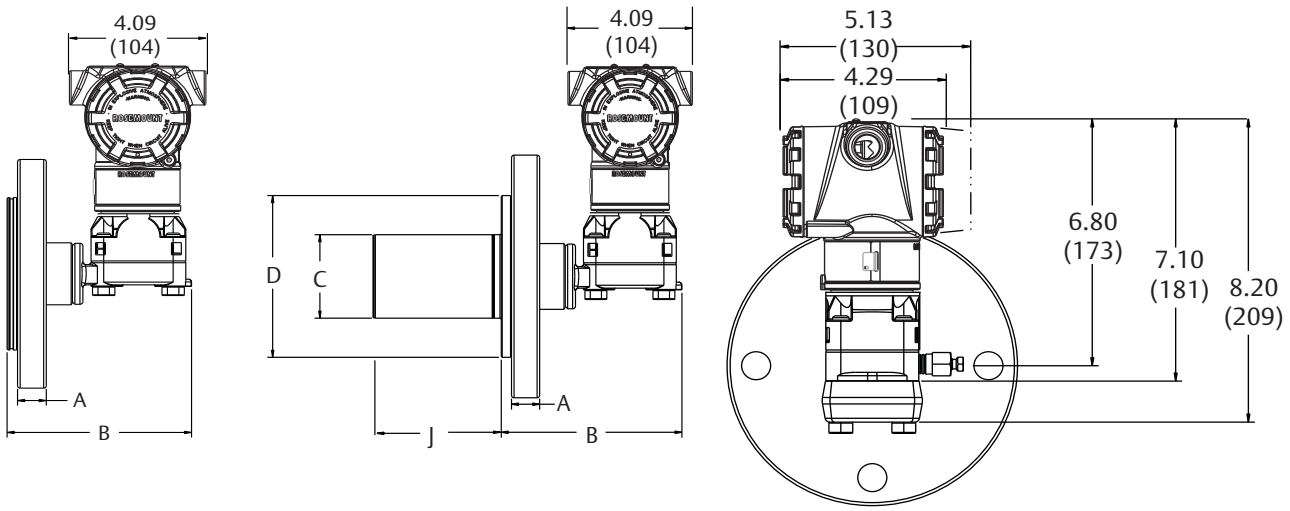

Optional flushing connection ring (lower housing)

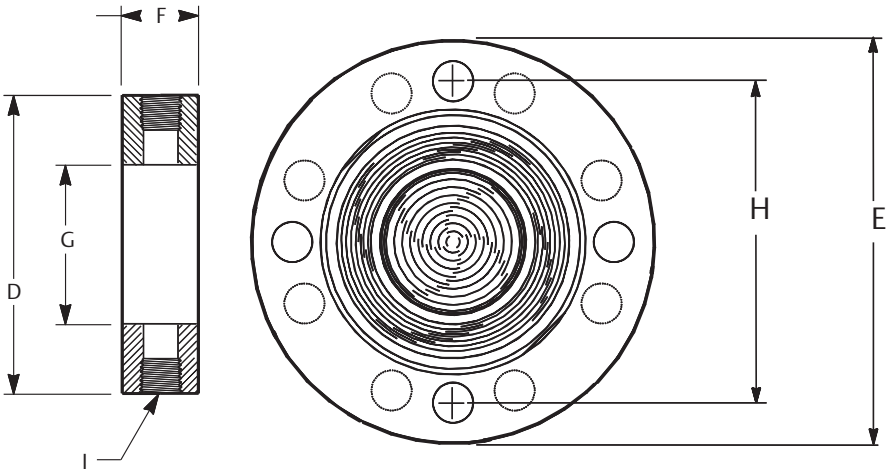

A–H. See Table 25 on page 79.
I. Flushing connection
Dimensions are in inches (millimeters).

J. 2-, 4-., or 6-in. extension
(only available with 3-. and 4-in., DN80, and DN100 flange configurations)

Table 25. Rosemount 3051L Dimensional Specifications

Class[1]	Pipe size	Flange thickness A	Bolt circle diameter H	Outside diameter E	No. of bolts	Bolt hole diameter	Extension diameter[1] C	O.D. gasket surface D
ASME B16.5 (ANSI) 150	2 (51)	0.69 (18)	4.75 (121)	6.0 (152)	4	0.75 (19)	N/A	3.6 (92)
	3 (76)	0.88 (22)	6.0 (152)	7.5 (191)	4	0.75 (19)	2.58 (66)	5.0 (127)
	4 (102)	0.88 (22)	7.5 (191)	9.0 (229)	8	0.75 (19)	3.5 (89)	6.2 (158)
ASME B16.5 (ANSI) 300	2 (51)	0.82 (21)	5.0 (127)	6.5 (165)	8	0.75 (19)	N/A	3.6 (92)
	3 (76)	1.06 (27)	6.62 (168)	8.25 (210)	8	0.88 (22)	2.58 (66)	5.0 (127)
	4 (102)	1.19 (30)	7.88 (200)	10.0 (254)	8	0.88 (22)	3.5 (89)	6.2 (158)
ASME B16.5 (ANSI) 600	2 (51)	1.00 (25)	5.0 (127)	6.5 (165)	8	0.75 (19)	N/A	3.6 (92)
	3 (76)	1.25 (32)	6.62 (168)	8.25 (210)	8	0.88 (22)	2.58 (66)	5.0 (127)
DIN 2501 PN 10–40	DN 50	20 mm	125 mm	165 mm	4	18 mm	N/A	4.0 (102)
DIN 2501 PN 25/40	DN 80	24 mm	160 mm	200 mm	8	18 mm	66 mm	5.4 (138)
	DN 100	24 mm	190 mm	235 mm	8	22 mm	89 mm	6.2 (158)
DIN 2501 PN 10/16	DN 100	20 mm	180 mm	220 mm	8	18 mm	89 mm	6.2 (158)

Dimensions are in inches (millimeters).

1. Tolerances are 0.040 (1.02), - 0.020 (0.51).

Class[1]	Pipe size	Process side G	Lower housing F		B
			1/4-in. NPT	1/2 -in. NPT	
ASME B16.5 (ANSI) 150	2 (51)	2.12 (54)	0.97 (25)	1.31 (33)	5.65 (143)
	3 (76)	3.60 (91)	0.97 (25)	1.31 (33)	5.65 (143)
	4 (102)	3.60 (91)	0.97 (25)	1.31 (33)	5.65 (143)
ASME B16.5 (ANSI) 300	2 (51)	2.12 (54)	0.97 (25)	1.31 (33)	5.65 (143)
	3 (76)	3.60 (91)	0.97 (25)	1.31 (33)	5.65 (143)
	4 (102)	3.60 (91)	0.97 (25)	1.31 (33)	5.65 (143)
ASME B16.5 (ANSI) 600	2 (51)	2.12 (54)	0.97 (25)	1.31 (33)	7.65 (194)
	3 (76)	3.60 (91)	0.97 (25)	1.31 (33)	7.65 (194)
DIN 2501 PN 10–40	DN 50	2.40 (61)	0.97 (25)	1.31 (33)	5.65 (143)
DIN 2501 PN 25/40	DN 80	3.60 (91)	0.97 (25)	1.31 (33)	5.65 (143)
	DN 100	3.60 (91)	0.97 (25)	1.31 (33)	5.65 (143)
DIN 2501 PN 10/16	DN 100	3.60 (91)	0.97 (25)	1.31 (33)	5.65 (143)

1. Tolerances are 0.040 (1.02), - 0.020 (0.51).

Options

Standard configuration

Unless otherwise specified, transmitter is shipped as follows:

Engineering units Differential/Gage: Absolute/ Rosemount 3051TA/ Rosemount 3051TG:	 inH_2O (Range 0, 1, 2, and 3) psi (all ranges)
4 mA[1]:	0 (engineering units above)
20 mA[1]:	Upper range limit
Output:	Linear
External buttons:	None
Flange type:	Specified model code option
Flange material:	Specified model code option
O-ring material:	Specified model code option
Drain/vent:	Specified model code option
LCD Display:	None
Alarm[1]:	High
Software tag:	(Blank)
Damping:	0.4 seconds[2]

1. Not applicable to FOUNDATION Fieldbus, PROFIBUS PA, or wireless.
2. For Fieldbus Protocols, default damping is 1 second.

Custom configuration[1]

If option code C1 is ordered, the customer may specify the following data in addition to the standard configuration parameters.

- Output information
- Transmitter information
- LCD display configuration
- Hardware selectable information
- Signal selection
- Wireless information
- Scaled variable

Refer to the Rosemount 3051 Configuration Data Sheet for Rosemount 3051 HART Protocol.

For Wireless, refer to the Rosemount 3051 Wireless Configuration Data Sheet.[1]

Tagging (three options available)

- Standard SST hardware tag is wired to the transmitter. Tag character height is 0.125-in. (3,18 mm), 56 characters maximum.
- Tag may be permanently stamped on transmitter nameplate upon request, 56 characters maximum.
- Tag may be stored in transmitter memory. Character limit is dependent on protocol.
  - HART Revision 5: 8 characters
  - HART Revision 7 and wireless: 32 characters
  - FOUNDATION Fieldbus: 32 characters
  - PROFIBUS PA: 32 characters

Commissioning tag[2]

A temporary commissioning tag is attached to all transmitters. The tag indicates the device ID and allows an area for writing the location.

Optional Rosemount 304, 305 or 306 Integral Manifolds

Factory assembled to 3051C and 3051T transmitters. Refer to the following Product Data Sheet for Rosemount 304, 305, and 306 for additional information.

Other seals

Refer to Rosemount DP Level Transmitters and 1199 Diaphragm Seal System Product Data Sheet for additional information.

1. *Not applicable to FOUNDATION Fieldbus or PROFIBUS PA Protocols.*
2. *Only applicable to FOUNDATION Fieldbus Protocol.*

Output information

Output range points must be the same unit of measure. Available units of measure include:

Pressure			
atm	inH_2O at 4 °C[2]	g/cm^2	psi
mbar	mmH_2O	kg/cm^2	torr
bar	mmHg	Pa	cmH_2O at 4 °C[1][2]
inH_20	mmH_2O at 4 °C[2]	kPa	mH_2O at 4 °C[1][2]
inHg	ftH_20	MPa[2]	ftH_2O at 60 °F[1][2]
hPa[1][2]	inH_2O at 60 °F[2]	kg/m^2[1][2]	cmHg at 0 °C[1][2]
mHg at 0 °C[1][2]	psf[1][2]	ftH_2O at 4 °C[1][2]	

1. Field configurable only, not available for factory calibration or custom configuration (option code C1 "Software configuration").
2. Not available with low power (output code M) or PROFIBUS PA Protocol (output option code W).

Display and interface options

M4 Digital display with LOI
- Available for 4–20 mA HART and PROFIBUS PA

M5 Digital display
- 2-Line, 5-Digit LCD display for low power output
- 2-Line, 8-Digit LCD display for 4–20 mA HART, FOUNDATION Fieldbus, and PROFIBUS PA Protocols
- 3-Line, 7-digit LCD display for wireless
- Direct reading of digital data for higher accuracy
- Displays user-defined flow, level, volume, or pressure units
- Displays diagnostic messages for local troubleshooting
- 90° rotation capability for easy viewing

Configuration buttons

Rosemount 3051 will ship with no buttons unless option D4 (analog zero and span), DZ (digital zero), or M4 (LOI) for local configuration buttons are specified.
The Rosemount 3051 Wireless Transmitter is available with a Digital zero button installed with or without the LCD display digital display.

Transient protection (option code T1)

Tested in accordance with IEEE C62.41.2-2002, location category B
6 kV crest (0.5 µs–100 kHz)
3 kA crest (8 x 20 µs)
6 kV crest (1.2 x 50 µs)

Bolts for flanges and adapters

- Options permit bolts for flanges and adapters to be obtained in various materials
- Standard material is plated CS per ASTM A449, type 1
  - L4 austenitic 316 SST bolts
  - L5 ASTM A 193, grade B7M bolts
  - L6 alloy k-500 bolts

Conduit plug

DO 316 SST conduit plug
Single 316 SST conduit plug replaces CS plug

Rosemount 3051C Coplanar Flange and 3051T bracket option

B4 Bracket for 2-in. pipe or panel mounting
- For use with the standard coplanar flange configuration
- Bracket for mounting of transmitter on 2-in. pipe or panel
- SST construction with SST bolts

Rosemount 3051C Traditional Flange bracket options

B1 Bracket for 2-in. pipe mounting
- For use with the traditional flange option
- Bracket for mounting on 2-in. pipe
- CS construction with CS bolts
- Coated with polyurethane paint

B2 Bracket for panel mounting
- For use with the traditional flange option
- Bracket for mounting transmitter on wall or panel
- CS construction with CS bolts
- Coated with polyurethane paint

B3 Flat Bracket for 2-in. pipe mounting
- For use with the traditional flange option
- Bracket for vertical mounting of transmitter on 2-in. pipe
- CS construction with CS bolts
- Coated with polyurethane paint

B7 B1 Bracket with SST bolts

Same bracket as the B1 option with series 300 SST bolts

B8 B2 Bracket with SST bolts

Same bracket as the B2 option with series 300 SST bolts

B9 B3 Bracket with SST bolts

Same bracket as the B3 option with series 300 SST bolts

BA SST B1 bracket with SST bolts

B1 bracket in SST with series 300 SST bolts

BC SST B3 Bracket with SST bolts

B3 bracket in SST with series 300 SST bolts

Global Headquarters
Emerson Automation Solutions
6021 Innovation Blvd.
Shakopee, MN 55379, USA
+1 800 999 9307 or +1 952 906 8888
+1 952 949 7001
RFQ.RMD-RCC@Emerson.com

North America Regional Office
Emerson Automation Solutions
8200 Market Blvd.
Chanhassen, MN 55317, USA
+1 800 999 9307 or +1 952 906 8888
+1 952 949 7001
RMT-NA.RCCRFQ@Emerson.com

Latin America Regional Office
Emerson Automation Solutions
1300 Concord Terrace, Suite 400
Sunrise, FL 33323, USA
+1 954 846 5030
+1 954 846 5121
RFQ.RMD-RCC@Emerson.com

Europe Regional Office
Emerson Automation Solutions Europe GmbH
Neuhofstrasse 19a P.O. Box 1046
CH 6340 Baar
Switzerland
+41 (0) 41 768 6111
+41 (0) 41 768 6300
RFQ.RMD-RCC@Emerson.com

Asia Pacific Regional Office
Emerson Automation Solutions
1 Pandan Crescent
Singapore 128461
+65 6777 8211
+65 6777 0947
Enquiries@AP.Emerson.com

Middle East and Africa Regional Office
Emerson Automation Solutions
Emerson FZE P.O. Box 17033
Jebel Ali Free Zone - South 2
Dubai, United Arab Emirates
+971 4 8118100
+971 4 8865465
RFQ.RMTMEA@Emerson.com

Linkedin.com/company/Emerson-Automation-Solutions

Twitter.com/Rosemount_News

Facebook.com/Rosemount

Youtube.com/user/RosemountMeasurement

Google.com/+RosemountMeasurement